SUPPLEMENT FOR 6 CYLINDER ENGINE MODEL

This service manual has been prepared to provide SUBARU service personnel with the necessary information and data for the correct maintenance and repair of SUBARU vehicles.
This manual includes the procedures for maintenance, disassembling, reassembling, inspection and adjustment of components and diagnostics for guidance of experienced mechanics.
Please peruse and utilize this manual fully to ensure complete repair work for satisfying our customers by keeping their vehicle in optimum condition. When replacement of parts during repair work is needed, be sure to use SUBARU genuine parts.

FUJI HEAVY INDUSTRIES LTD.

G2281GE

SUPPLEMENT FOR 6 CYLINDER ENGINE MODEL

COOLING

CO(H6)

1. General Description S146001

A: SPECIFICATIONS S146001E49

Cooling system			Electric fan + Forced engine coolant circulation system
Total engine coolant capacity		ℓ (US qt, Imp qt)	Approx. 6.2 (6.6, 5.5)
Water pump	Type		Centrifugal impeller type
	Discharge performance	Discharge	320 ℓ (84.5 US gal, 70.4 Imp gal)/min.
		Pump speed—total engine coolant head	5,500 rpm — 18 mAq (176.5 kPa)
		Engine coolant temperature	80°C (176°F)
	Impeller diameter		73.2 mm (2.882 in)
	Number of impeller vanes		6
	Tooth number of pump sprocket		22 t
Thermostat	Type		Wax pellet type
	Start to open		76 — 80°C (169 — 176°F)
	Fully open		91°C (196°F)
	Valve lift		9.0 mm (0.354 in) or more
	Valve bore		35 mm (1.38 in)
Radiator fan	Motor		120 W (main fan) 120 W (sub fan)
	Fan diameter × Blade		320 mm (12.60 in) × 5 (main fan) 320 mm (12.60 in) × 7 (sub fan)
Radiator	Type		Down flow, pressure type
	Core dimensions		699 × 349 × t27 mm (27.52 × 13.74 × t1.06 in)
	Pressure range in which cap valve is open		Above: 108±15 kPa (1.1±0.15 kg/cm^2, 16±2 psi) Below: −1.0 to −4.9 kPa (−0.01 to −0.05 kg/cm^2, −0.1 to −0.7 psi)
	Fins		Corrugated fin type
Reservoir tank	Capacity		0.45 ℓ (0.5 US qt, 0.4 Imp qt)

B: COMPONENT S146001A05

1. WATER PUMP S146001A0501

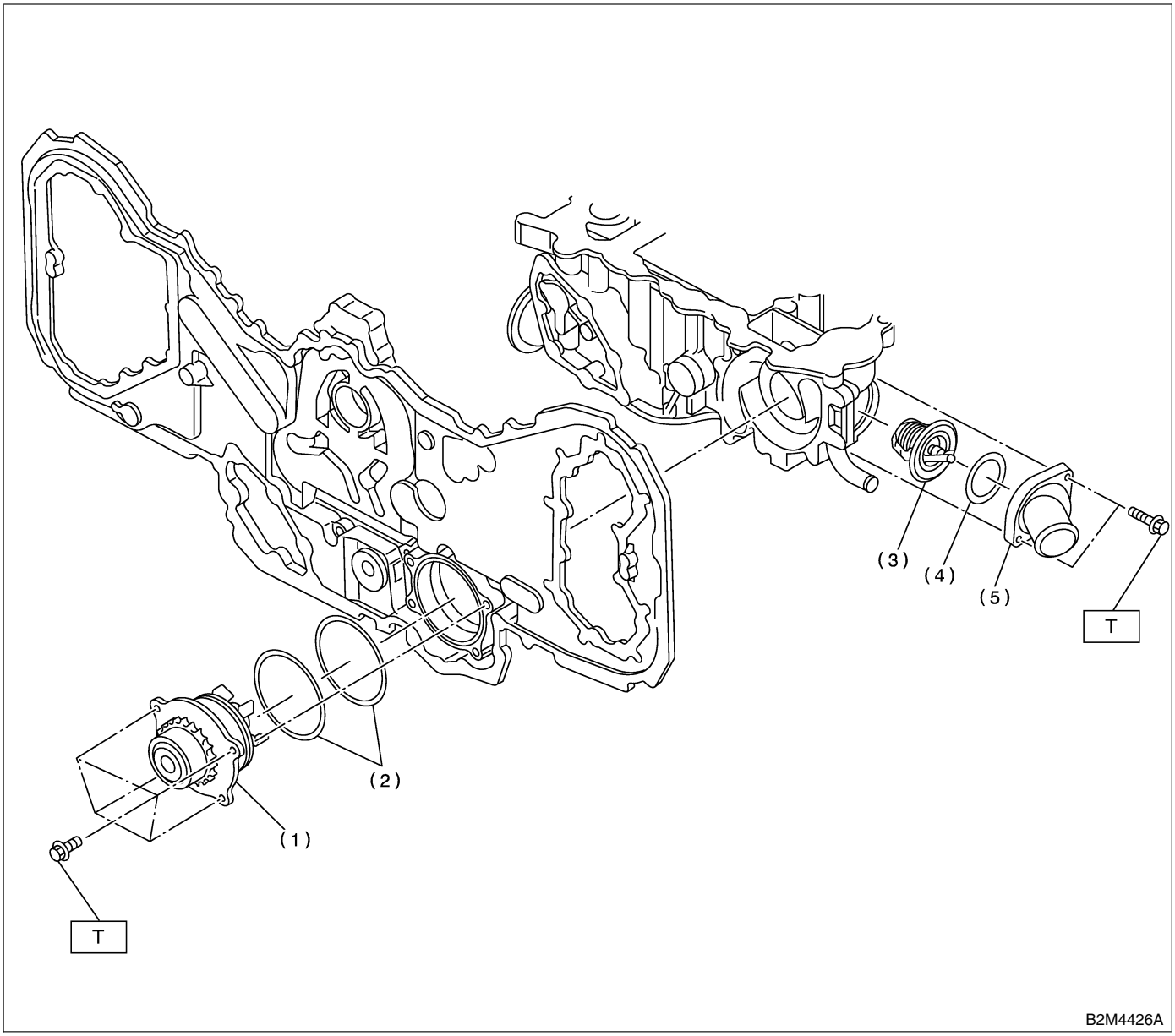

(1) Water pump ASSY
(2) O-ring
(3) Thermostat
(4) Gasket
(5) Thermostat cover

Tightening torque: N·m (kgf-m, ft-lb)
T: 6.4 (0.65, 4.7)

2. RADIATOR AND RADIATOR FAN S146001A0502

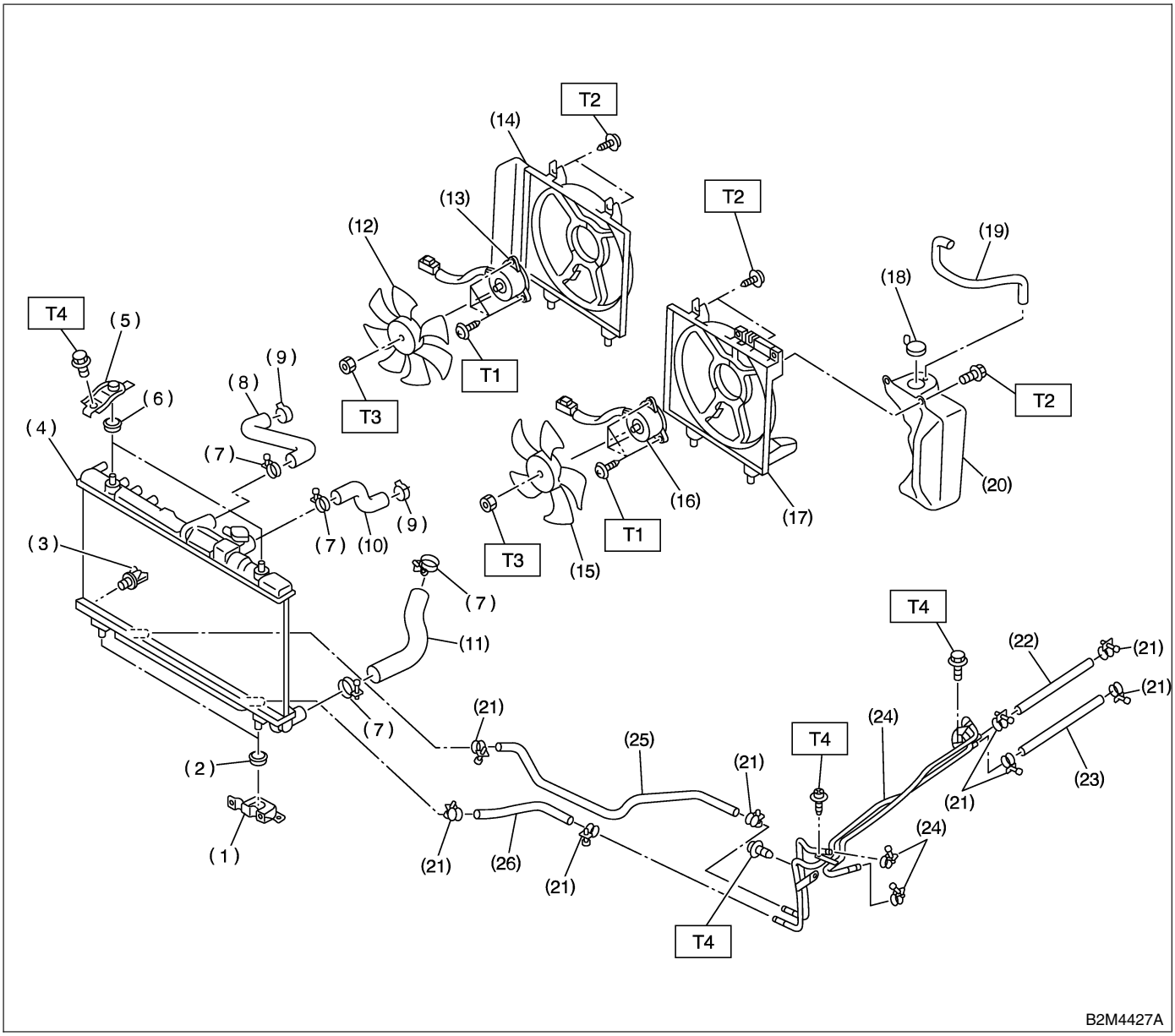

(1) Radiator lower bracket
(2) Radiator lower cushion
(3) Drain cock
(4) Radiator
(5) Radiator upper bracket
(6) Radiator upper cushion
(7) Clamp
(8) Radiator inlet hose
(9) Clamp
(10) Reservoir hose
(11) Radiator outlet hose
(12) Radiator sub fan
(13) Radiator sub fan motor
(14) Sub fan shroud
(15) Radiator main fan
(16) Radiator main fan motor
(17) Main fan shroud
(18) Engine coolant reservoir tank cap
(19) Over flow hose
(20) Engine coolant reservoir tank
(21) ATF hose clamp
(22) ATF inlet hose A
(23) ATF outlet hose A
(24) ATF pipe
(25) ATF inlet hose B
(26) ATF outlet hose B

Tightening torque: N·m (kgf-m, ft-lb)
T1: 4.4 (0.45, 3.3)
T2: 4.9 (0.50, 3.6)
T3: 7.5 (0.76, 5.5)
T4: 12 (1.2, 8.7)

C: CAUTION S146001A03

- Wear working clothing, including a cap, protective goggles, and protective shoes during operation.
- Remove contamination including dirt and corrosion before removal, installation or disassembly.
- Keep the disassembled parts in order and protect them from dust or dirt.
- Before removal, installation or disassembly, be sure to clarify the failure. Avoid unnecessary removal, installation, disassembly, and replacement.
- Be careful not to burn your hands, because each part in the vehicle is hot after running.
- Be sure to tighten fasteners including bolts and nuts to the specified torque.
- Place shop jacks or safety stands at the specified points.
- Before disconnecting electrical connectors of sensors or units, be sure to disconnect negative terminal from battery.

D: PREPARATION TOOL S146001A17

1. SPECIAL TOOLS S146001A1701

ILLUSTRATION	TOOL NUMBER	DESCRIPTION	REMARKS
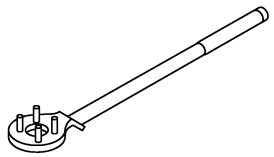 B2M3870	499977100	CRANK PULLEY WRENCH	Used for stopping crankshaft pulley when loosening and tightening crankshaft pulley bolts.
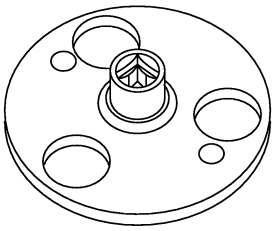 B2M3995	18231AA000 (Newly adopted tool)	CAMSHAFT SPROCKET WRENCH	Used for removing and installing camshaft sprocket.

2. GENERAL PURPOSE TOOLS S146001A1702

TOOL NAME	REMARKS
Radiator cap tester	Used for measuring pressure.

2. Radiator Main Fan System

S146732

A: SCHEMATIC S146732A21

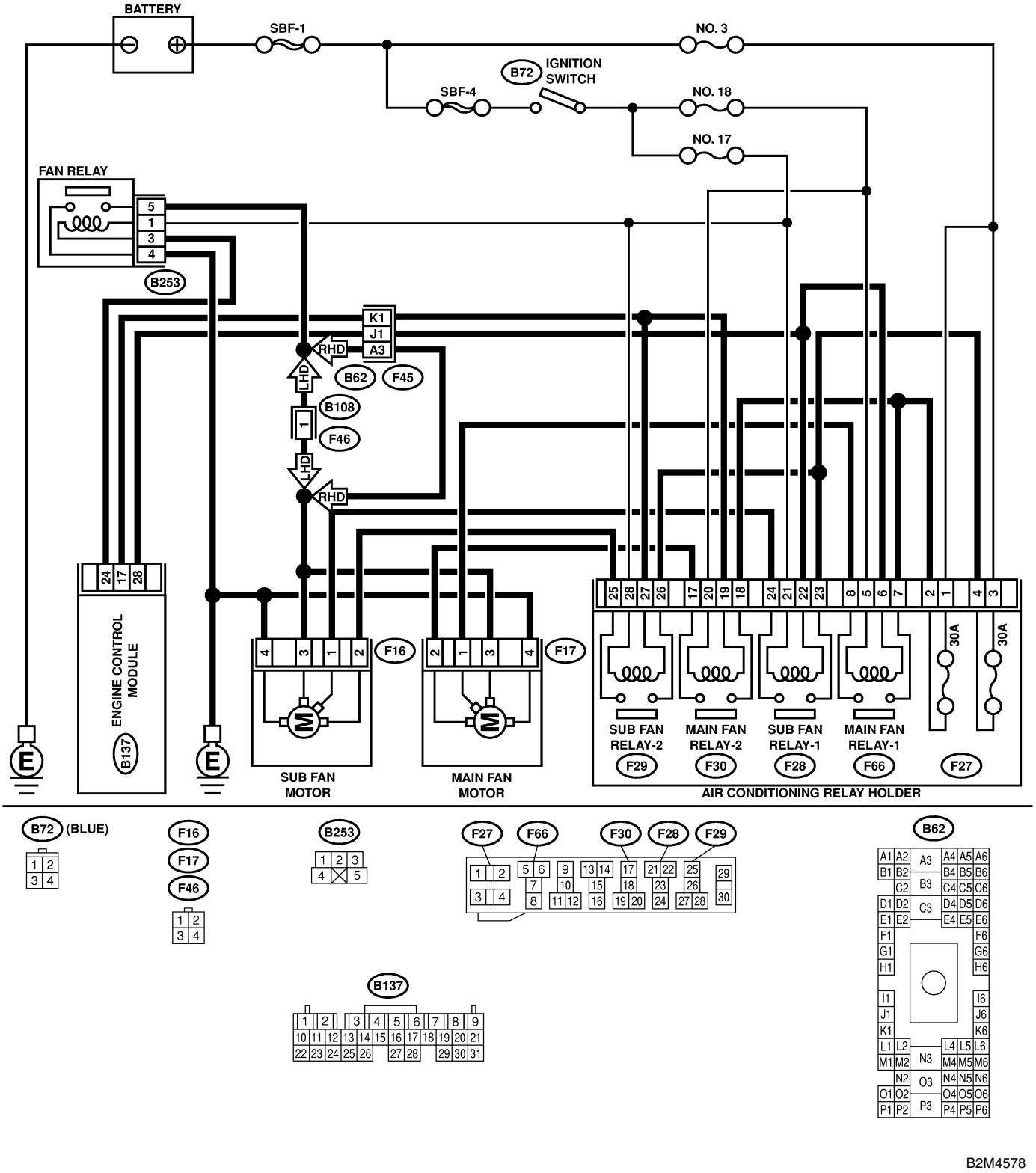

B2M4578

B: INSPECTION S146732A10

TROUBLE SYMPTOM:

- Radiator main fan does not rotate in low speed under the following conditions:
  (1) Coolant temperature 95°C (203°F) or more.
  (2) A/C switch set to OFF.
- Radiator main fan does not rotate in middle speed under the following conditions:
  (1) Coolant temperature 95°C (203°F) or less.
  (2) A/C switch set to ON and A/C temperature at the lowest position.
- Radiator main fan does not rotate in high speed under the following conditions:
  (1) Coolant temperature 95°C (203°F) or more.
  (2) A/C switch set to ON and A/C temperature at the lowest position.

No.	Step	Check	Yes	No
1	**CHECK OPERATION OF RADIATOR FAN.** 1) Run the engine at idle (Vehicle stationary) 2) Turn the A/C switch to ON, set temperature at the lowest position. 3) Inspect while coolant temperature is 95°C (203°F) or less.	When A/C compressor is operating, does the radiator main fan rotate in middle speed?	Go to step **2**.	Go to step **4**.
2	**CHECK OPERATION OF RADIATOR FAN.** 1) Turn the A/C switch to OFF. 2) Warm the engine until coolant temperature is over 95°C (203°F).	When A/C compressor is operating, does the radiator main fan rotate in low speed?	Go to step **3**.	Go to step **18**.
3	**CHECK OPERATION OF RADIATOR FAN.** Turn the A/C switch to ON, set temperature at the lowest position.	When A/C compressor is operating, does the radiator main fan rotate in high speed?	Radiator main fan system is okay.	Go to step **31**.
4	**CHECK POWER SUPPLY TO MAIN FAN MOTOR.** **CAUTION:** **Be careful not to overheat engine during repair.** 1) Turn ignition switch to OFF. 2) Disconnect connector from main fan motor. 3) Start the engine, keep coolant temperature below 95°C (203°F). 4) Turn the A/C switch to ON, set temperature at the lowest position. 5) Measure voltage while A/C compressor is rotating. 6) Measure voltage between main fan motor connector and chassis ground. ***Connector & terminal*** ***(F17) No. 2 (+) — Chassis ground (–):***	Is the voltage more than 10 V?	Go to step **5**.	Go to step **8**.
5	**CHECK GROUND CIRCUIT OF MAIN FAN MOTOR.** 1) Turn ignition switch to OFF. 2) Measure resistance between main fan motor connector and chassis ground. ***Connector & terminal*** ***(F17) No. 4 — Chassis ground:***	Is the resistance less than 5 Ω?	Go to step **6**.	Repair open circuit in harness between main fan motor connector and chassis ground.
6	**CHECK POOR CONTACT.** Check poor contact in main fan motor connector.	Is there poor contact in main fan motor connector?	Repair poor contact in main fan motor connector.	Go to step **7**.
7	**CHECK MAIN FAN MOTOR.** Connect battery positive (+) terminal to terminal No. 2 and negative (–) terminal to terminal No. 4 of main fan motor connector.	Does the main fan rotate?	Repair poor contact in main fan motor connector.	Replace main fan motor with a new one.

No.	Step	Check	Yes	No
8	**CHECK POWER SUPPLY TO MAIN FAN RELAY 2.** 1) Turn ignition switch to OFF. 2) Remove main fan relay 2 from A/C relay holder. 3) Measure voltage between main fan relay 2 terminal and chassis ground. ***Connector & terminal*** ***(F30) No. 18 (+) — Chassis ground (–):***	Is the voltage more than 10 V?	Go to step **9**.	Go to step **10**.
9	**CHECK POWER SUPPLY TO MAIN FAN RELAY 2.** 1) Turn ignition switch to ON. 2) Measure voltage between main fan relay 2 terminal and chassis ground. ***Connector & terminal*** ***(F30) No. 20 (+) — Chassis ground (–):***	Is the voltage more than 10 V?	Go to step **13**.	Go to step **12**.
10	**CHECK 30 A FUSE.** 1) Remove 30 A fuse from A/C relay holder. 2) Check condition of fuse.	Is the fuse blown-out?	Replace fuse.	Go to step **11**.
11	**CHECK POWER SUPPLY TO A/C RELAY HOLDER 30 A FUSE TERMINAL.** Measure voltage of harness between A/C relay holder 30 A fuse terminal and chassis ground. ***Connector & terminal*** ***(F27) No. 1 (+) — Chassis ground (–):***	Is the voltage more than 10 V?	Repair open circuit in harness between 30 A fuse and main fan relay 2 terminal.	Repair open circuit in harness between main fuse box connector and 30 A fuse terminal.
12	**CHECK FUSE.** 1) Turn ignition switch to OFF. 2) Remove fuse No. 18 from joint box. 3) Check condition of fuse.	Is the fuse blown-out?	Replace fuse.	Repair open circuit in harness between main fan relay 2 and ignition switch.
13	**CHECK MAIN FAN RELAY 2.** 1) Turn ignition switch to OFF. 2) Remove main fan relay 2. 3) Measure resistance of main fan relay 2. ***Terminal*** ***No. 17 — No. 18:***	Is the resistance more than 1 MΩ?	Go to step **14**.	Replace main fan relay 2.
14	**CHECK MAIN FAN RELAY 2.** 1) Connect battery to terminals No. 19 and No. 20 of main fan relay 2. 2) Measure resistance of main fan relay 2. ***Terminal*** ***No. 17 — No. 18:***	Is the resistance less than 1 Ω?	Go to step **15**.	Replace main fan relay 2.
15	**CHECK HARNESS BETWEEN MAIN FAN RELAY 2 TERMINAL AND MAIN FAN MOTOR CONNECTOR.** Measure resistance of harness between main fan motor connector and main fan relay 2 terminal. ***Connector & terminal*** ***(F17) No. 2 — (F30) No. 17:***	Is the resistance less than 1 Ω?	Go to step **16**.	Repair open circuit in harness between main fan motor connector and main fan relay 2 terminal.

No.	Step	Check	Yes	No
16	**CHECK HARNESS BETWEEN MAIN FAN RELAY 2 AND ECM.** 1) Turn ignition switch to OFF. 2) Disconnect connector from ECM. 3) Measure resistance of harness between main fan relay 2 connector and ECM connector. ***Connector & terminal*** ***(F30) No. 19 — (B137) No. 17:***	Is the resistance less than 1 Ω?	Go to step **17**.	Repair open circuit in harness between main fan relay 2 and ECM.
17	**CHECK POOR CONTACT.** Check poor contact in connector between main fan and ECM.	Is there poor contact in connector between main fan motor and ECM.	Repair poor contact connector.	Contact your Subaru distributor.
18	**CHECK POWER SUPPLY TO MAIN FAN MOTOR.** **CAUTION:** **Be careful not to overheat engine during repair.** 1) Turn ignition switch to OFF. 2) Disconnect main fan motor connector. 3) Start the engine, and warm it up until engine coolant temperature increases over 95°C (203°F). 4) Measure voltage between main fan motor connector and chassis ground. ***Connector & terminal*** ***(F17) No. 1 (+) — Chassis ground (–):***	Is the voltage more than 10 V?	Go to step **19**.	Go to step **21**.
19	**CHECK POOR CONTACT.** Check poor contact in main fan motor connector.	Is there poor contact in main fan motor connector?	Repair poor contact in main fan motor connector.	Go to step **20**.
20	**CHECK MAIN FAN MOTOR.** Connect battery positive (+) terminal to terminal No. 1, and negative (–) terminal to terminal No. 4 of main fan motor connector.	Does the main fan rotate?	Repair poor contact in main fan motor connector.	Replace main fan motor with a new one.
21	**CHECK POWER SUPPLY TO MAIN FAN RELAY 1.** 1) Turn ignition switch to OFF. 2) Remove main fan relay 1 from A/C relay holder. 3) Measure voltage between main fan relay 1 terminal and chassis ground. ***Connector & terminal*** ***(F66) No. 7 (+) — Chassis ground (–):***	Is the voltage more than 10 V?	Go to step **22**.	Go to step **23**.
22	**CHECK POWER SUPPLY TO MAIN FAN RELAY 1.** 1) Turn ignition switch to ON. 2) Measure voltage between main fan relay 1 terminal and chassis ground. ***Connector & terminal*** ***(F66) No. 5 (+) — Chassis ground (–):***	Is the voltage more than 10 V?	Go to step **26**.	Go to step **25**.
23	**CHECK 30 A FUSE.** 1) Remove 30 A fuse from A/C relay holder. 2) Check condition of fuse.	Is the fuse blown-out?	Replace fuse.	Go to step **24**.
24	**CHECK POWER SUPPLY TO A/C RELAY HOLDER 30 A FUSE TERMINAL.** Measure voltage of harness between A/C relay holder 30 A fuse terminal and chassis ground. ***Connector & terminal*** ***(F27) No. 1 (+) — Chassis ground (–):***	Is the voltage more than 10 V?	Repair open circuit in harness between 30 A fuse and main fan relay terminal.	Repair open circuit in harness between main fuse box connector and 30 A fuse terminal.

No.	Step	Check	Yes	No
25	**CHECK FUSE.** 1) Turn ignition switch to OFF. 2) Remove fuse No. 18 from joint box. 3) Check condition of fuse.	Is the fuse blown-out?	Replace fuse.	Repair open circuit in harness between main fan relay 1 and ignition switch.
26	**CHECK MAIN FAN RELAY 1.** 1) Turn ignition switch to OFF. 2) Remove main fan relay 1. 3) Measure resistance of main fan relay 1. ***Terminal*** ***No. 7 — No. 8:***	Is the resistance more than 1 MΩ?	Go to step **27**.	Replace main fan relay 1.
27	**CHECK MAIN FAN RELAY.** 1) Connect battery to terminals No. 5 and No. 6 of main fan relay 1. 2) Measure resistance of main fan relay 1. ***Terminal*** ***No. 7 — No. 8:***	Is the resistance less than 1 Ω?	Go to step **28**.	Replace main fan relay 1.
28	**CHECK HARNESS BETWEEN MAIN FAN RELAY TERMINAL AND MAIN FAN MOTOR CONNECTOR.** Measure resistance of harness between main fan motor connector and main fan relay 1 terminal. ***Connector & terminal*** ***(F17) No. 1 — (F66) No. 8:***	Is the resistance less than 1 Ω?	Go to step **29**.	Replace open circuit in harness between main fan motor connector and main fan relay 1 terminal.
29	**CHECK HARNESS BETWEEN MAIN FAN RELAY 1 AND ECM.** 1) Turn ignition switch to OFF. 2) Disconnect connector from ECM. 3) Measure resistance of harness between main fan relay 1 connector and ECM connector. ***Connector & terminal*** ***(F66) No. 6 — (B137) No. 28:***	Is the resistance less than 1 Ω?	Go to step **30**.	Repair open circuit in harness between main fan relay 1 and ECM.
30	**CHECK POOR CONTACT.** Check poor contact in connector between main fan and ECM.	Is there poor contact in connector between main fan motor and ECM?	Repair poor contact connector.	Contact your Subaru distributor.
31	**CHECK HARNESS BETWEEN MAIN FAN MOTOR CONNECTOR AND CHASSIS GROUND.** 1) Turn ignition switch to OFF. 2) Disconnect main fan motor connector. 3) Measure resistance of harness between main fan motor connector and chassis ground. ***Connector & terminal*** ***(F17) No. 3 — Chassis ground:***	Is the resistance less than 5 Ω?	Go to step **32**.	Go to step **33**.
32	**CHECK POOR CONTACT.** Check poor contact in main fan motor connector.	Is there poor contact in main fan motor connector?	Repair poor contact in main fan motor connector.	Replace main fan motor with a new one.
33	**CHECK HARNESS BETWEEN MAIN FAN AND FAN RELAY.** 1) Disconnect fan relay connector. 2) Measure resistance of between main fan motor connector and fan relay connector. ***Connector & terminal*** ***(F17) No. 3 — (B253) No. 5:***	Is the resistance less than 1 Ω?	Go to step **34**.	Repair open circuit between main fan motor connector and fan relay connector.

No.	Step	Check	Yes	No
34	**CHECK POWER SUPPLY TO FAN RELAY.** 1) Turn ignition switch to ON. 2) Measure voltage between fan relay terminal and chassis ground. ***Connector & terminal*** ***(B253) No. 1 (+) — Chassis ground (–):***	Is the voltage more than 10V?	Go to step **36**.	Go to step **35**.
35	**CHECK FUSE.** 1) Turn ignition switch to OFF. 2) Remove fuse No. 18 from joint box. 3) Check condition of fuse.	Is the fuse blown-out?	Replace fuse.	Repair open circuit in harness between main fan relay and ignition switch.
36	**CHECK FAN RELAY.** 1) Turn ignition switch to OFF. 2) Remove fan relay. 3) Measure resistance of fan relay. ***Terminal*** ***No. 4 — No. 5:***	Is resistance more than 1 MΩ?	Go to step **37**.	Replace fan relay.
37	**CHECK FAN RELAY.** 1) Connect battery to terminals No. 1 and No. 3 of fan relay. 2) Measure resistance of fan relay. ***Terminal*** ***No. 4 — No. 5:***	Is resistance less than 1 Ω?	Go to step **38**.	Replace fan relay.
38	**CHECK HARNESS BETWEEN FAN RELAY TERMINAL AND CHASSIS GROUND.** Measure resistance of harness between fan relay connector and chassis ground. ***Connector & terminal*** ***(B253) No. 4 — Chassis ground:***	Is resistance less than 1 Ω?	Go to step **39**.	Repair open circuit in harness between fan relay connector and chassis ground.
39	**CHECK HARNESS BETWEEN FAN RELAY AND ECM.** 1) Turn ignition switch to OFF. 2) Disconnect connector from ECM. 3) Measure resistance of harness between fan relay and ECM connector. ***Connector & terminal*** ***(B253) No. 3 — (B137) No. 24:***	Is resistance less than 1 Ω?	Go to step **40**.	Repair open circuit in harness between fan relay connector and ECM.
40	**CHECK POOR CONTACT.** Check poor contact in connector between fan relay and ECM.	Is there poor contact in connector between fan relay and ECM?	Repair poor contact connector.	Contact your Subaru distributor.

NOTE:
Inspection by your Subaru distributor is required, because probable cause is deterioration of multiple parts.

3. Radiator Sub Fan System S146733

A: SCHEMATIC S146733A21

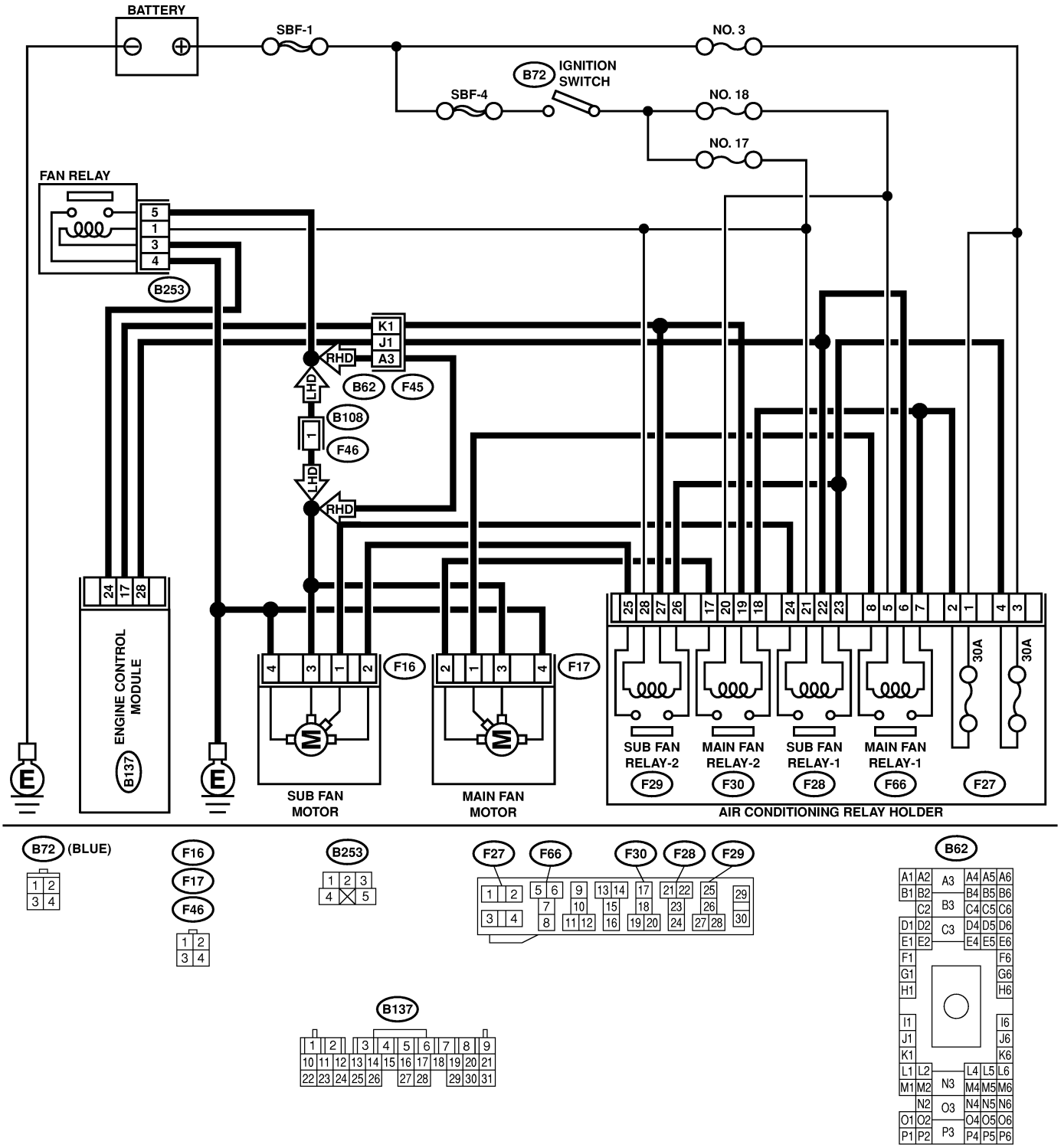

B: INSPECTION S146733A10

TROUBLE SYMPTOM:

- Radiator sub fan does not rotate in low speed under the following conditions:
  (1) Coolant temperature 95°C (203°F) or more.
  (2) A/C switch set to OFF.
- Radiator sub fan does not rotate in middle speed under the following conditions:
  (1) Coolant temperature 95°C (203°F) or less.
  (2) A/C switch set to ON and A/C temperature at the lowest position.
- Radiator sub fan does not rotate in high speed under the following conditions:
  (1) Coolant temperature 95°C (203°F) or more.
  (2) A/C switch set to ON and A/C temperature at the lowest position.

No.	Step	Check	Yes	No
1	**CHECK OPERATION OF RADIATOR FAN.** 1) Run the engine at idle (Vehicle stationary) 2) Turn the A/C switch to ON, set temperature at the lowest position. 3) Inspect while coolant temperature is 95°C (203°F) or less.	When A/C compressor is operating, does the radiator sub fan rotate in middle speed?	Go to step **2**.	Go to step **4**.
2	**CHECK OPERATION OF RADIATOR FAN.** 1) Turn the A/C switch to OFF. 2) Warm the engine until coolant temperature is over 95°C (203°F).	When A/C compressor is operating, does the radiator sub fan rotate in low speed?	Go to step **3**.	Go to step **18**.
3	**CHECK OPERATION OF RADIATOR FAN.** 1) Turn the A/C switch to ON, set temperature at the lowest position.	When A/C compressor is operating, does the radiator sub fan rotate in high speed?	Radiator sub fan system is okay.	Go to step **31**.
4	**CHECK POWER SUPPLY TO SUB FAN MOTOR.** **CAUTION:** **Be careful not to overheat engine during repair.** 1) Turn ignition switch to OFF. 2) Disconnect connector from sub fan motor. 3) Start the engine, keep coolant temperature below 95°C (203°F). 4) Turn the A/C switch to ON, set temperature at the lowest position. 5) Measure voltage while A/C compressor is rotating. 6) Measure voltage between sub fan motor connector and chassis ground. ***Connector & terminal*** ***(F16) No. 2 (+) — Chassis ground (–):***	Is the voltage more than 10V?	Go to step **5**.	Go to step **8**.
5	**CHECK GROUND CIRCUIT OF SUB FAN MOTOR.** 1) Turn ignition switch to OFF. 2) Measure resistance between sub fan motor connector and chassis ground. ***Connector & terminal*** ***(F16) No. 4 — Chassis ground:***	Is the resistance less than 5 Ω?	Go to step **6**.	Repair open circuit in harness between sub fan motor connector and chassis ground.
6	**CHECK POOR CONTACT.** Check poor contact in sub fan motor connector.	Is there poor contact in sub fan motor connector?	Repair poor contact in sub fan motor connector.	Go to step **7**.
7	**CHECK SUB FAN MOTOR.** Connect battery positive (+) terminal to terminal No. 2 and negative (–) terminal to terminal No. 4 of sub fan motor connector.	Does the sub fan rotate?	Repair poor contact in sub fan motor connector.	Replace sub fan motor with a new one.

No.	Step	Check	Yes	No
8	**CHECK POWER SUPPLY TO SUB FAN RELAY 2.** 1) Turn ignition switch to OFF. 2) Remove sub fan relay 2 from A/C relay holder. 3) Measure voltage between sub fan relay 2 terminal and chassis ground. ***Connector & terminal*** ***(F29) No. 26 (+) — Chassis ground (–):***	Is the voltage more than 10 V?	Go to step **9**.	Go to step **10**.
9	**CHECK POWER SUPPLY TO SUB FAN RELAY 2.** 1) Turn ignition switch to ON. 2) Measure voltage between sub fan relay 2 terminal and chassis ground. ***Connector & terminal*** ***(F29) No. 28 (+) — Chassis ground (–):***	Is the voltage more than 10 V?	Go to step **13**.	Go to step **12**.
10	**CHECK 30 A FUSE.** 1) Remove 30 A fuse from A/C relay holder. 2) Check condition of fuse.	Is the fuse blown-out?	Replace fuse.	Go to step **11**.
11	**CHECK POWER SUPPLY TO A/C RELAY HOLDER 30 A FUSE TERMINAL.** Measure voltage of harness between A/C relay holder 30 A fuse terminal and chassis ground. ***Connector & terminal*** ***(F27) No. 3 (+) — Chassis ground (–):***	Is the voltage more than 10 V?	Repair open circuit in harness between 30 A fuse and sub fan relay 2 terminal.	Repair open circuit in harness between main fuse box connector and 30 A fuse terminal.
12	**CHECK FUSE.** 1) Turn ignition switch to OFF. 2) Remove fuse No. 18 from joint box. 3) Check condition of fuse.	Is the fuse blown-out?	Replace fuse.	Repair open circuit in harness between sub fan relay 2 and ignition switch.
13	**CHECK SUB FAN RELAY 2.** 1) Turn ignition switch to OFF. 2) Remove sub fan relay 2. 3) Measure resistance of sub fan relay 2. ***Terminal*** ***No. 25 — No. 26:***	Is the resistance more than 1 MΩ?	Go to step **14**.	Replace sub fan relay 2.
14	**CHECK SUB FAN RELAY 2.** 1) Connect battery to terminals No. 27 and No. 28 of sub fan relay 2. 2) Measure resistance of sub fan relay 2. ***Terminal*** ***No. 25 — No. 26:***	Is the resistance less than 1 Ω?	Go to step **15**.	Replace sub fan relay 2.
15	**CHECK HARNESS BETWEEN SUB FAN RELAY 2 TERMINAL AND SUB FAN MOTOR CONNECTOR.** Measure resistance of harness between sub fan motor connector and sub fan relay 2 terminal. ***Connector & terminal*** ***(F16) No. 2 — (F29) No. 25:***	Is the resistance less than 1 Ω?	Go to step **16**.	Repair open circuit in harness between sub fan motor connector and sub fan relay 2 terminal.

No.	Step	Check	Yes	No
16	**CHECK HARNESS BETWEEN SUB FAN RELAY 2 AND ECM.** 1) Turn ignition switch to OFF. 2) Disconnect connector from ECM. 3) Measure resistance of harness between sub fan relay 2 connector and ECM connector. ***Connector & terminal*** ***(F29) No. 27 — (B137) No. 17:***	Is the resistance less than 1 Ω?	Go to step **17**.	Repair open circuit in harness between sub fan relay 2 and ECM.
17	**CHECK POOR CONTACT.** Check poor contact in connector between sub fan and ECM.	Is there poor contact in connector between sub fan motor and ECM.	Repair poor contact connector.	Contact your Subaru distributor.
18	**CHECK POWER SUPPLY TO SUB FAN MOTOR.** **CAUTION:** **Be careful not to overheat engine during repair.** 1) Turn ignition switch to OFF. 2) Disconnect sub fan motor connector. 3) Start the engine, and warm it up until engine coolant temperature increases over 95°C (203°F). 4) Measure voltage between sub fan motor connector and chassis ground. ***Connector & terminal*** ***(F16) No. 1 (+) — Chassis ground (–):***	Is the voltage more than 10 V?	Go to step **19**.	Go to step **21**.
19	**CHECK POOR CONTACT.** Check poor contact in sub fan motor connector.	Is there poor contact in sub fan motor connector?	Repair poor contact in sub fan motor connector.	Go to step **20**.
20	**CHECK SUB FAN MOTOR.** Connect battery positive (+) terminal to terminal No. 1, and negative (–) terminal to terminal No. 4 of sub fan motor connector.	Does the sub fan rotate?	Repair poor contact in sub fan motor connector.	Replace sub fan motor with a new one.
21	**CHECK POWER SUPPLY TO SUB FAN RELAY 1.** 1) Turn ignition switch to OFF. 2) Remove sub fan relay 1 from A/C relay holder. 3) Measure voltage between sub fan relay 1 terminal and chassis ground. ***Connector & terminal*** ***(F28) No. 23 (+) — Chassis ground (–):***	Is the voltage more than 10 V?	Go to step **22**.	Go to step **23**.
22	**CHECK POWER SUPPLY TO SUB FAN RELAY 1.** 1) Turn ignition switch to ON. 2) Measure voltage between sub fan relay 1 terminal and chassis ground. ***Connector & terminal*** ***(F28) No. 21 (+) — Chassis ground (–):***	Is the voltage more than 10 V?	Go to step **26**.	Go to step **25**.
23	**CHECK 30 A FUSE.** 1) Remove 30 A fuse from A/C relay holder. 2) Check condition of fuse.	Is the fuse blown-out?	Replace fuse.	Go to step **24**.
24	**CHECK POWER SUPPLY TO A/C RELAY HOLDER 30 A FUSE TERMINAL.** Measure voltage of harness between A/C relay holder 30 A fuse terminal and chassis ground. ***Connector & terminal*** ***(F27) No. 3(+) — Chassis ground (–):***	Is the voltage more than 10 V?	Repair open circuit in harness between 30 A fuse and sub fan relay 1 terminal.	Repair open circuit in harness between main fuse box connector and 30 A fuse terminal.

No.	Step	Check	Yes	No
25	**CHECK FUSE.** 1) Turn ignition switch to OFF. 2) Remove fuse No. 18 from joint box. 3) Check condition of fuse.	Is the fuse blown-out?	Replace fuse.	Repair open circuit in harness between sub fan relay 1 and ignition switch.
26	**CHECK SUB FAN RELAY 1.** 1) Turn ignition switch to OFF. 2) Remove sub fan relay 1. 3) Measure resistance of sub fan relay 1. ***Terminal*** ***No. 23 — No. 24:***	Is the resistance more than 1 MΩ?	Go to step **27**.	Replace sub fan relay 1.
27	**CHECK SUB FAN RELAY.** 1) Connect battery to terminals No. 21 and No. 22 of sub fan relay 1. 2) Measure resistance of sub fan relay 1. ***Terminal*** ***No. 23 — No. 24:***	Is the resistance less than 1 Ω?	Go to step **28**.	Replace sub fan relay 1.
28	**CHECK HARNESS BETWEEN SUB FAN RELAY TERMINAL AND SUB FAN MOTOR CONNECTOR.** Measure resistance of harness between sub fan motor connector and sub fan relay 1 terminal. ***Connector & terminal*** ***(F16) No. 1 — (F28) No. 24:***	Is the resistance less than 1 Ω?	Go to step **29**.	Replace open circuit in harness between sub fan motor connector and sub fan relay 1 terminal.
29	**CHECK HARNESS BETWEEN SUB FAN RELAY 1 AND ECM.** 1) Turn ignition switch to OFF. 2) Disconnect connector from ECM. 3) Measure resistance of harness between sub fan relay 1 connector and ECM connector. ***Connector & terminal*** ***(F28) No. 22 — (B137) No. 28:***	Is the resistance less than 1 Ω?	Go to step **30**.	Repair open circuit in harness between sub fan relay and ECM.
30	**CHECK POOR CONTACT.** Check poor contact in connector between sub fan and ECM.	Is there poor contact in connector between sub fan motor and ECM?	Repair poor contact connector.	Contact your Subaru distributor.
31	**CHECK HARNESS BETWEEN SUB FAN MOTOR CONNECTOR AND CHASSIS GROUND.** 1) Turn ignition switch to OFF. 2) Disconnect sub fan motor connector. 3) Measure resistance of harness between sub fan motor connector and chassis ground. ***Connector & terminal*** ***(F16) No. 3 — Chassis ground:***	Is the resistance less than 5 Ω?	Go to step **32**.	Go to step **33**.
32	**CHECK POOR CONTACT.** Check poor contact in sub fan motor connector.	Is there poor contact in sub fan motor connector?	Repair poor contact in sub fan motor connector.	Replace sub fan motor with a new one.
33	**CHECK HARNESS BETWEEN SUB FAN AND FAN RELAY.** 1) Disconnect fan relay connector. 2) Measure resistance between sub fan motor connector and fan relay connector. ***Connector & terminal*** ***(F16) No. 3 — (B253) No. 5:***	Is the resistance less than 1 Ω?	Go to step **34**.	Repair open circuit between sub fan motor connector and fan relay connector.

No.	Step	Check	Yes	No
34	**CHECK POWER SUPPLY TO FAN RELAY.** 1) Turn ignition switch to ON. 2) Measure voltage between fan relay terminal and chassis ground. ***Connector & terminal*** ***(B253) No. 1 (+) — Chassis ground (–):***	Is the voltage more than 10V?	Go to step **36**.	Go to step **35**.
35	**CHECK FUSE.** 1) Turn ignition switch to OFF. 2) Remove fuse No. 18 from joint box. 3) Check condition of fuse.	Is the fuse blown-out?	Replace fuse.	Repair open circuit in harness between fan relay and ignition switch.
36	**CHECK FAN RELAY.** 1) Turn ignition switch to OFF. 2) Remove fan relay. 3) Measure resistance of fan relay. ***Terminal*** ***No. 4 — No. 5:***	Is resistance more than 1 MΩ?	Go to step **37**.	Replace fan relay.
37	**CHECK FAN RELAY.** 1) Connect battery to terminals No. 1 and No. 3 of fan relay. 2) Measure resistance of fan relay. ***Terminal*** ***No. 4 — No. 5:***	Is resistance less than 1 Ω?	Go to step **38**.	Replace fan relay.
38	**CHECK HARNESS BETWEEN FAN RELAY TERMINAL AND CHASSIS GROUND.** Measure resistance of harness between fan relay connector and chassis ground. ***Connector & terminal*** ***(B253) No. 4 — Chassis ground:***	Is resistance less than 1 Ω?	Go to step **39**.	Repair open circuit in harness between fan relay connector and chassis ground.
39	**CHECK HARNESS BETWEEN FAN RELAY AND ECM.** 1) Turn ignition switch to OFF. 2) Disconnect connector from ECM. 3) Measure resistance of harness between fan relay connector and ECM connector. ***Connector & terminal*** ***(B253) No. 3 — (B137) No. 24:***	Is resistance less than 1 Ω?	Go to step **40**.	Repair open circuit in harness between fan relay connector and ECM.
40	**CHECK POOR CONTACT.** Check poor contact in connector between fan relay and ECM.	Is there poor contact in connector between fan relay and ECM?	Repair poor contact connector.	Contact your Subaru distributor.

NOTE:
Inspection by your Subaru distributor is required, because probable cause is deterioration of multiple parts.

4. Engine Coolant S146060

A: REPLACEMENT S146060A20

1. DRAINING OF ENGINE COOLANT

S146060A2001

1) Lift-up the vehicle.
2) Remove under cover.

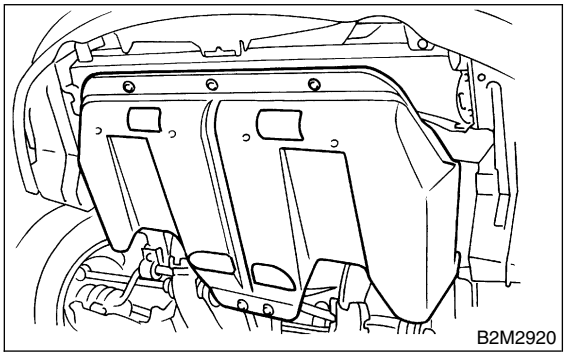

3) Remove drain cock to drain engine coolant into container.

NOTE:
Remove radiator cap so that engine coolant will drain faster.

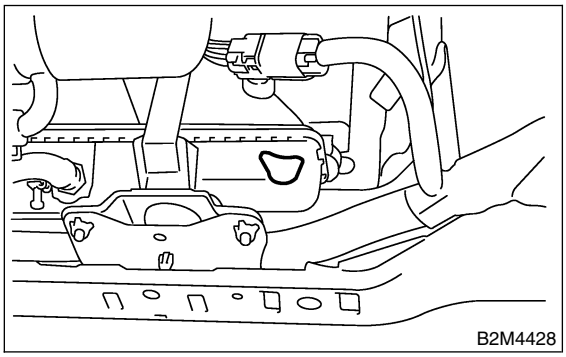

2. FILLING OF ENGINE COOLANT S146060A2002

1) Fill engine coolant into radiator up to filler neck position.

Coolant capacity (fill up to "FULL" level):
Approx. 7.7 ℓ (8-1/8 US qt, 6-3/4 Imp qt)

CAUTION:
The SUBARU Genuine Coolant containing anti-freeze and anti-rust agents is especially made for SUBARU engine, which has an aluminum crankcase. Always use SUBARU Genuine Coolant, since other coolant may cause corrosion.

2) Fill engine coolant into reservoir tank up to upper level.

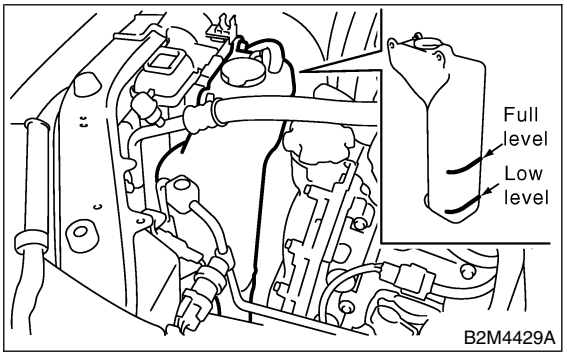

3) Attach radiator cap and reservoir tank cap properly.
4) Warm-up engine completely for more than five minutes at 2,000 to 3,000 rpm.
5) If engine coolant level drops in radiator, add engine coolant to filler neck position.
6) If engine coolant level drops from upper level of reservoir tank, add engine coolant to upper level.
7) Attach radiator cap and reservoir tank cap properly.

B: INSPECTION S146060A10

1. RELATIONSHIP OF SUBARU COOLANT CONCENTRATION AND FREEZING TEMPERATURE S146060A1001

The concentration and safe operating temperature of the SUBARU coolant is shown in the diagram. Measuring the temperature and specific gravity of the coolant will provide this information.

[Example]
If the coolant temperature is 25°C (77°F) and its specific gravity is 1.054, the concentration is 35% (point A), the safe operating temperature is –14°C (7°F) (point B), and the freezing temperature is –20°C (–4°F) (point C).

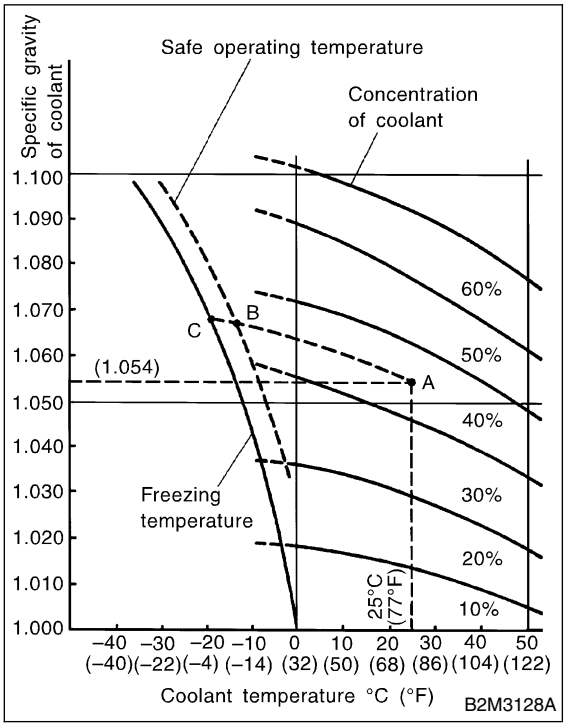

2. PROCEDURE TO ADJUST THE CONCENTRATION OF THE COOLANT

S146060A1002

To adjust the concentration of the coolant according to temperature, find the proper fluid concentration in the above diagram and replace the necessary amount of coolant with an undiluted solution of SUBARU genuine coolant (concentration 50).
The amount of coolant that should be replaced can be determined using the diagram.

[Example]
Assume that the coolant concentration must be increased form 25% to 40%. Find point A, where the 25% line of coolant concentration intersects with the 40% curve of the necessary coolant concentration, and read the scale on the vertical axis of the graph at height A. The quantity of coolant to be drained is 2.1 liters (2.2 US qt, 1.8 Imp qt). Drain 2.1 liters (2.2 US qt, 1.8 Imp qt) of coolant from the cooling system and add 2.1 liters (2.2 US qt, 1.8 Imp qt) of the undiluted solution of SUBARU coolant.
If a coolant concentration of 50% is needed, drain all the coolant and refill with the undiluted solution only.

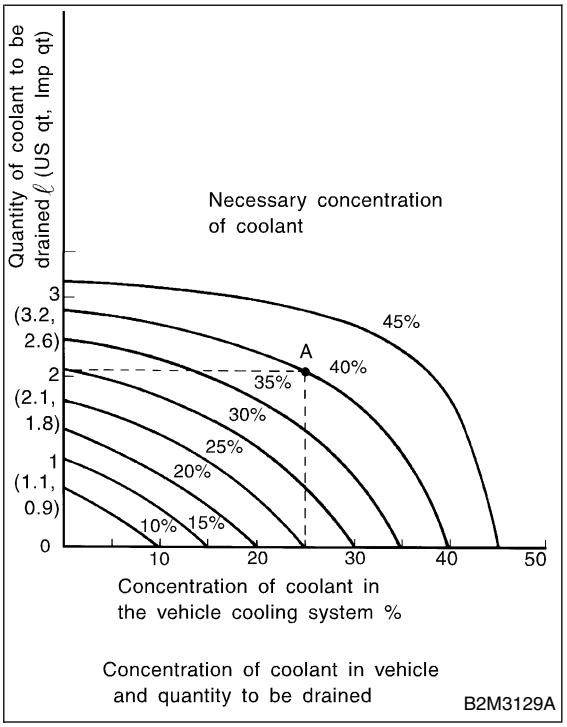

5. Water Pump S146061

A: REMOVAL S146061A18

1) Remove radiator. <Ref. to CO(H6)-28, REMOVAL, Radiator.>
2) Remove V-belt.
<Ref. to ME(H6)-31, REMOVAL, V-belt.>
3) Remove front chain cover.
<Ref. to ME(H6)-42, REMOVAL, Front Chain Cover.>
4) Remove timing chain.
<Ref. to ME(H6)-44, REMOVAL, Timing Chain Assembly.>
5) Remove water pump.

NOTE:
When water pump cannot be easily removed, install M8 bolt in opposing bolt holes (“A” in figure). Alternately tightening each bolt should be enough to gradually free water pump from rear chain cover.

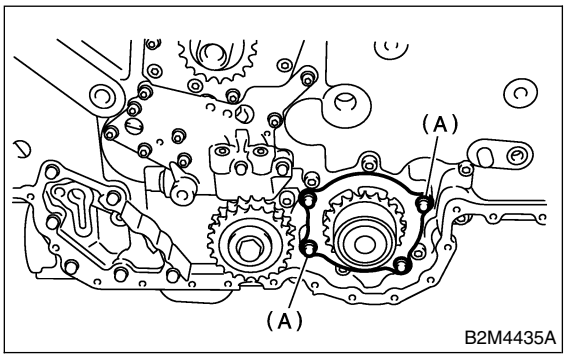

B: INSTALLATION S146061A11

1) Install water pump onto rear chain cover.

NOTE:
Apply engine coolant to O-ring.

Tightening torque:
6.4 N·m (0.65 kgf-m, 4.7 ft-lb)

CAUTION:
Replace O-rings with a new one.

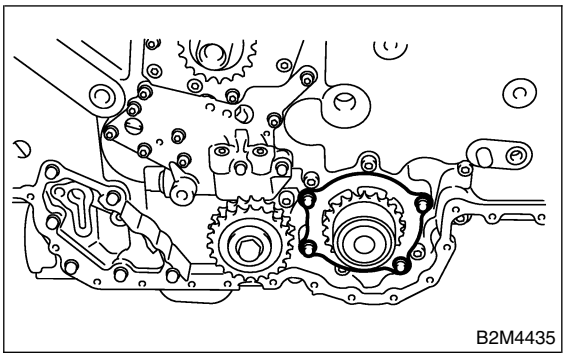

2) Install timing chain assembly. <Ref. to ME(H6)-45, INSTALLATION, Timing Chian Assembly.>
3) Install front chain cover.
<Ref. to ME(H6)-42, INSTALLATION, Front Chain Cover.>
4) Install V-belt. <Ref. to ME(H6)-31, INSTALLATION, V-belt.>
5) Install radiator. <Ref. to CO(H6)-29, INSTALLATION, Radiator.>
6) Fill coolant. <Ref. to CO(H6)-18, FILLING OF ENGINE COOLANT, REPLACEMENT, Engine Coolant.>

C: INSPECTION S146061A10

1) Check water pump bearing for smooth rotation.
2) Check water pump pulley for abnormalities.

6. Thermostat S146062

A: REMOVAL S146062A18

1) Lift-up the vehicle.
2) Remove under cover.

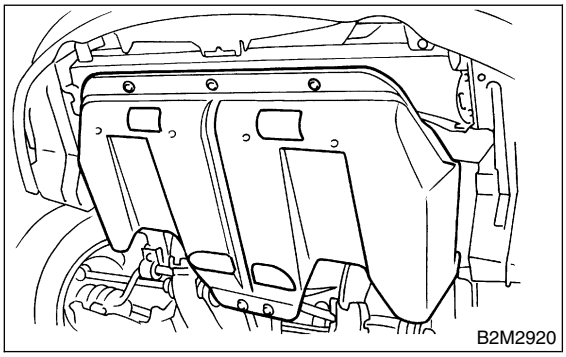

3) Drain engine coolant completely. <Ref. to CO(H6)-18 DRAINING OF ENGINE COOLANT, REPLACEMENT, Engine Coolant.>

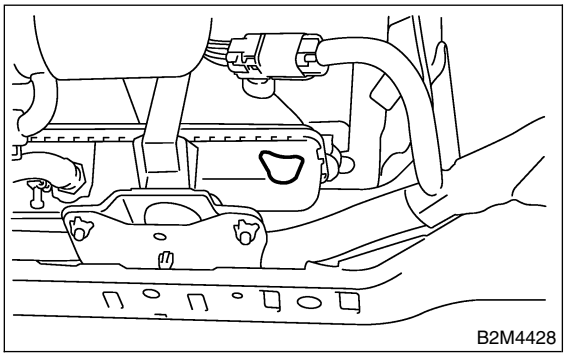

4) Disconnect radiator outlet hose from thermostat cover.

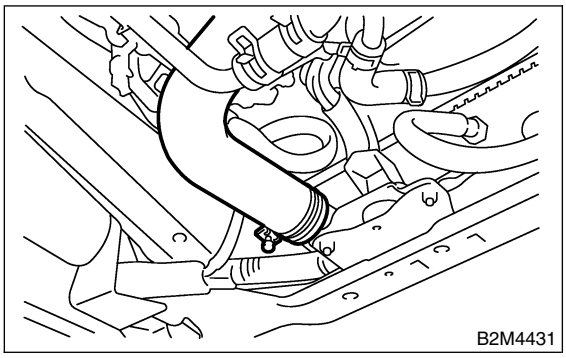

5) Remove thermostat cover and gasket, and pull out the thermostat.

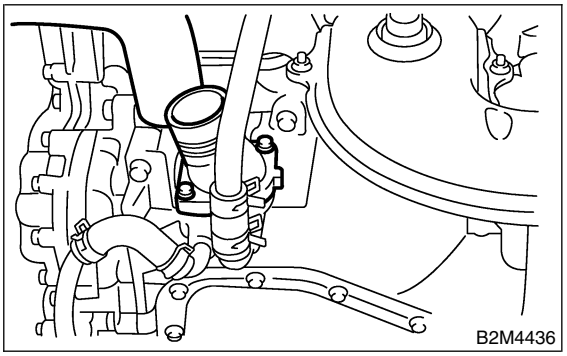

B: INSTALLATION S146062A11

1) Install the thermostat to oil pan upper, and install the thermostat cover together with a gasket.

CAUTION:
When reinstalling the thermostat, use a new gasket.

Tightening torque:
6.4 N·m (0.65 kgf-m, 4.7 ft-lb)

2) Connect radiator outlet hose to thermostat cover.
3) Fill coolant. <Ref. to CO(H6)-18 FILLING OF ENGINE COOLANT, REPLACEMENT, Engine Coolant.>

C: INSPECTION S146062A10

Replace the thermostat if the valve does not close completely at an ambient temperature or if the following test shows unsatisfactory results.
Immerse the thermostat and a thermometer in water. Raise water temperature gradually, and measure the temperature and valve lift when the valve begins to open and when the valve is fully opened. During the test, agitate the water for even temperature distribution. The measurement should be to the specification.

Starts to open:
76.0 — 80.0°C (169 — 176°F)

Fully opens:
91°C (196°F)

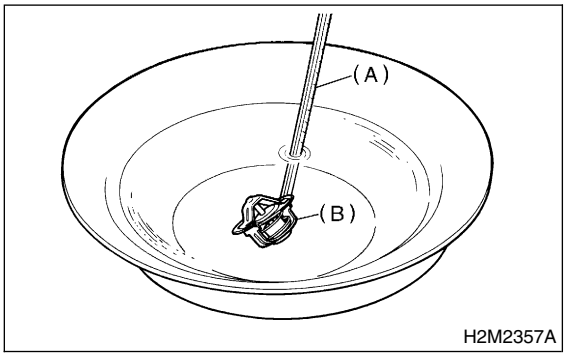

(A) Thermometer
(B) Thermostat

7. Radiator S146058

A: REMOVAL S146058A18

1) Disconnect battery ground cable.

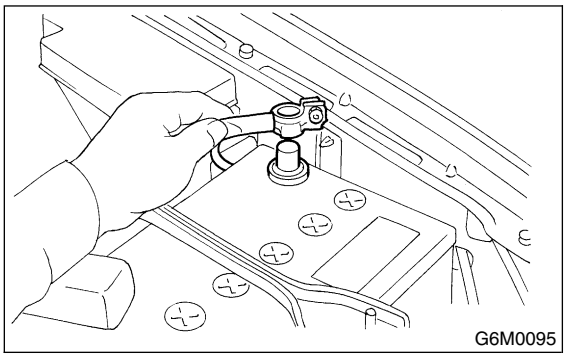

2) Lift-up the vehicle.
3) Remove under cover.

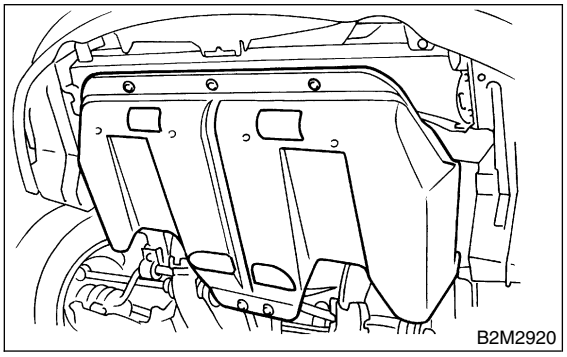

4) Drain engine coolant completely. <Ref. to CO(H6)-18 DRAINING OF ENGINE COOLANT, REPLACEMENT, Engine Coolant.>

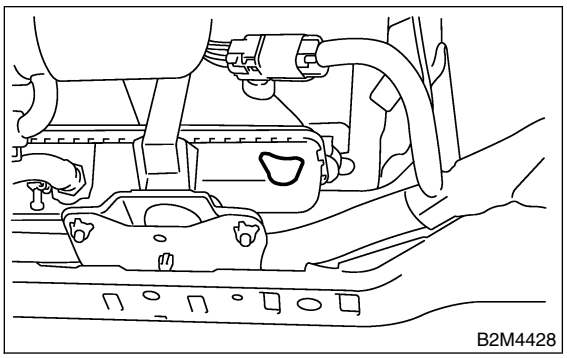

5) Disconnect connectors of radiator main fan (A) and sub fan (B) motor.

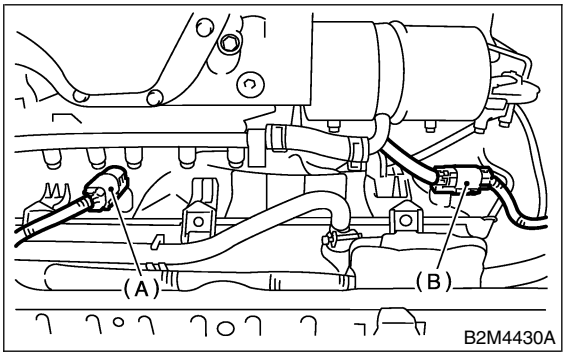

6) Disconnect radiator outlet hose from radiator.

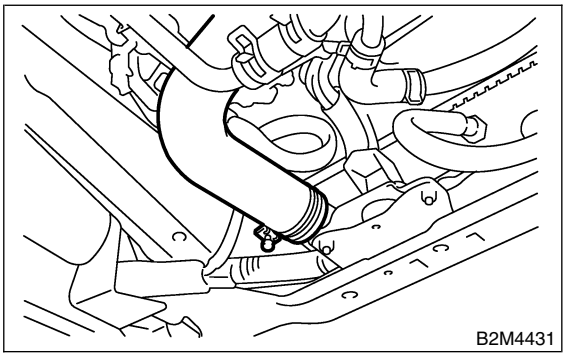

7) Disconnect ATF cooler hoses from radiator.

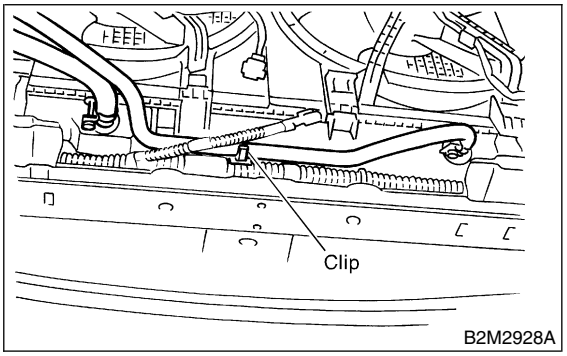

8) Lower the vehicle.
9) Remove air intake duct.

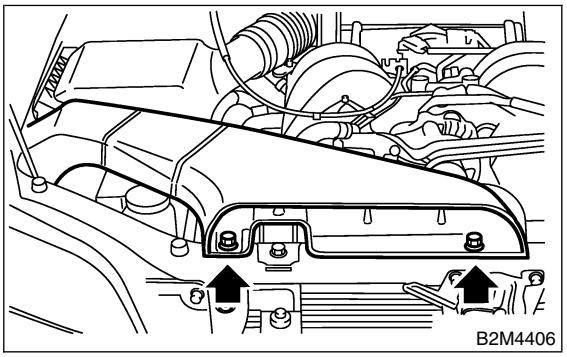

10) Disconnect over flow hose.

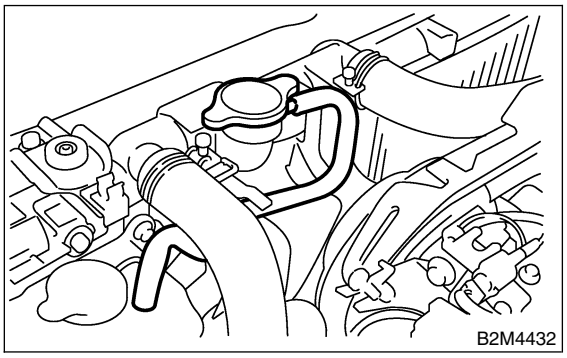

11) Remove reservoir tank.

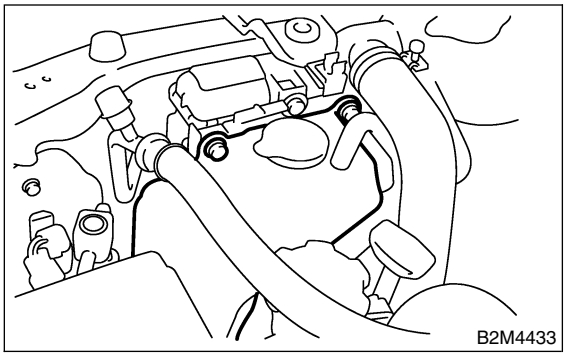

12) Disconnect radiator inlet hoses from radiator.

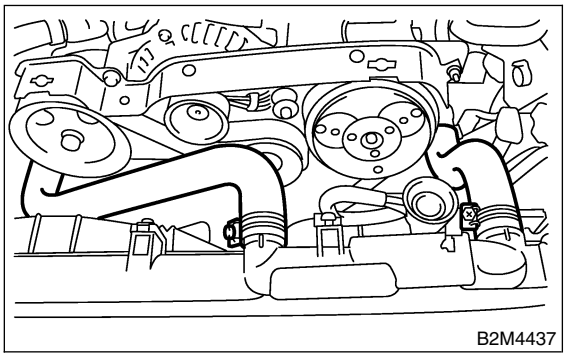

13) Remove radiator upper brackets.

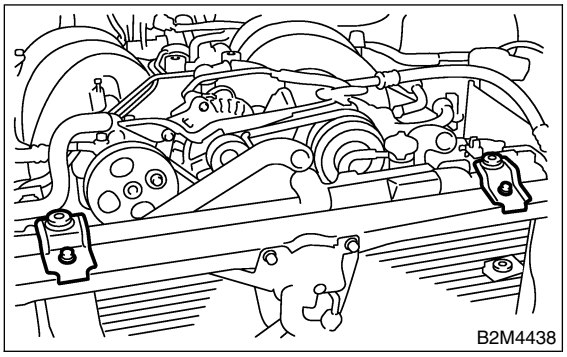

14) Detach power steering hose from the clip on the radiator.

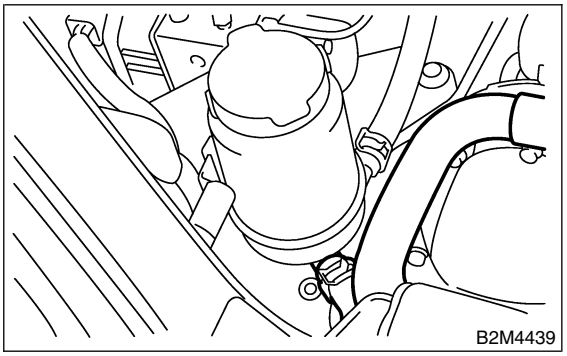

15) While slightly lifting radiator, slide it to left.
16) Lift radiator up and away from vehicle.

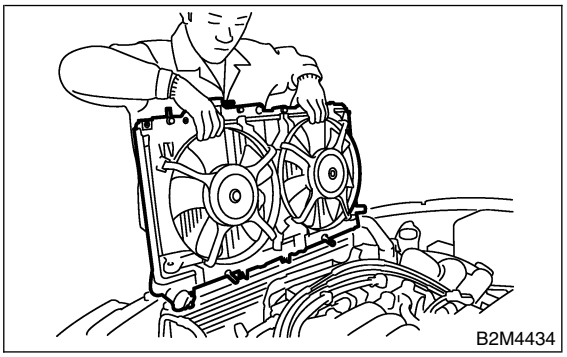

B: INSTALLATION S146058A11

1) Attach radiator mounting cushions to holes on the vehicle.

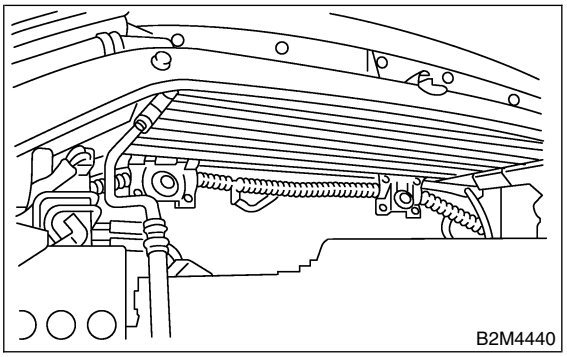

2) Install radiator while fitting radiator pins to cushions.

NOTE:
Fit pins on lower side of radiator into cushions on body side.

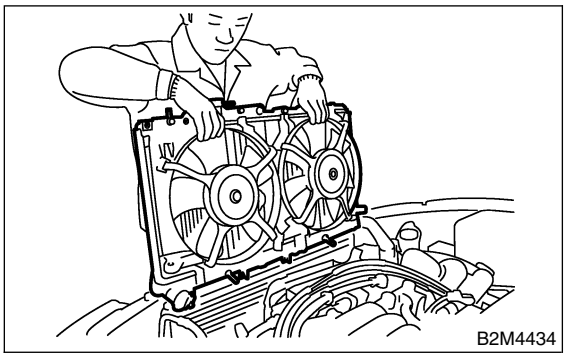

3) Install radiator brackets and tighten bolts.

Tightening torque:
12 N·m (1.2 kgf-m, 8.7 ft-lb)

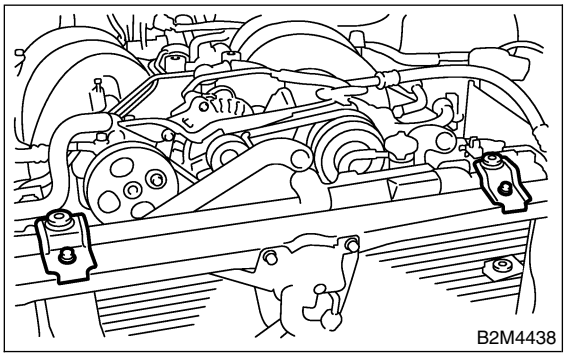

4) Attach power steering hose to the radiator.

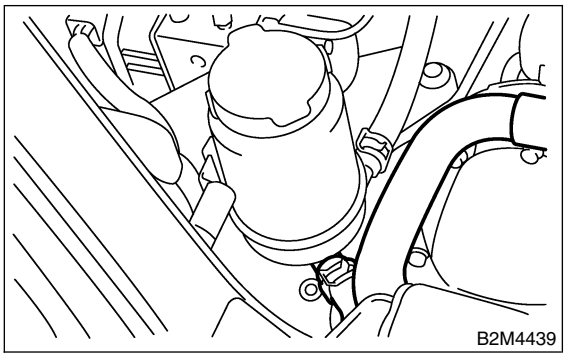

5) Connect radiator inlet hoses.

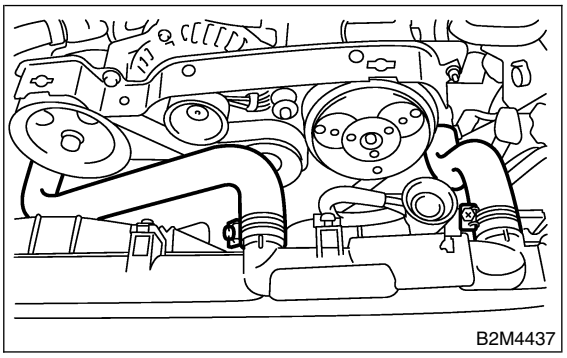

6) Install reservoir tank.

Tightening torque:
4.9 N·m (0.50 kgf-m, 3.6 ft-lb)

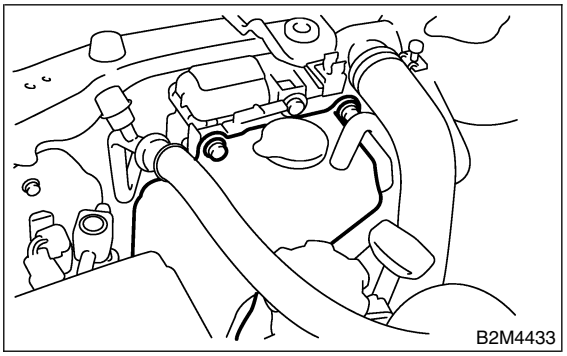

7) Install air intake duct.

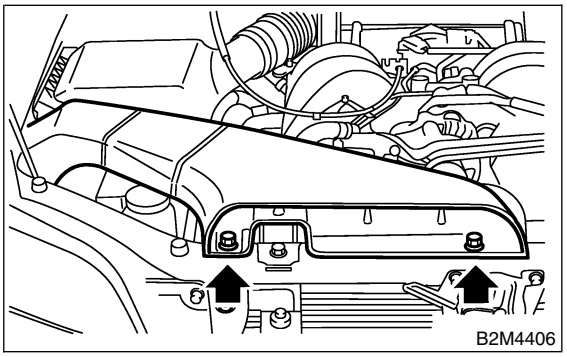

8) Lift-up the vehicle.
9) Connect ATF cooler hoses.

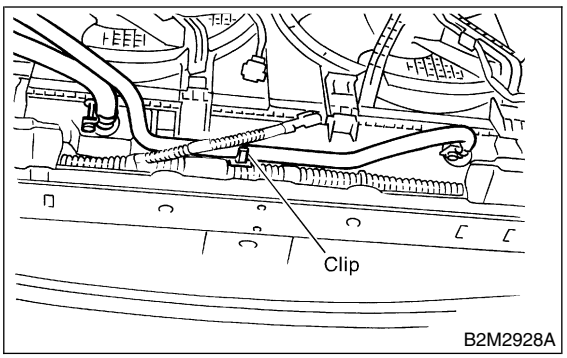

10) Connect connectors to radiator main fan motor (A) and sub fan motor (B).

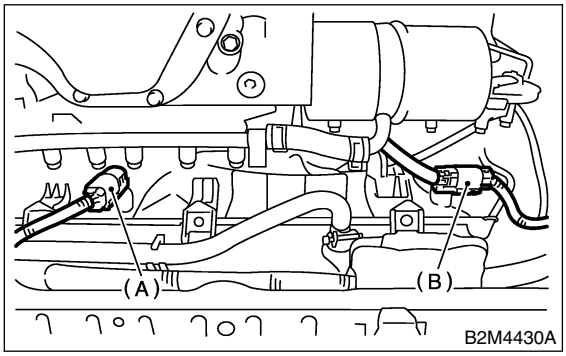

11) Connect radiator outlet hose.

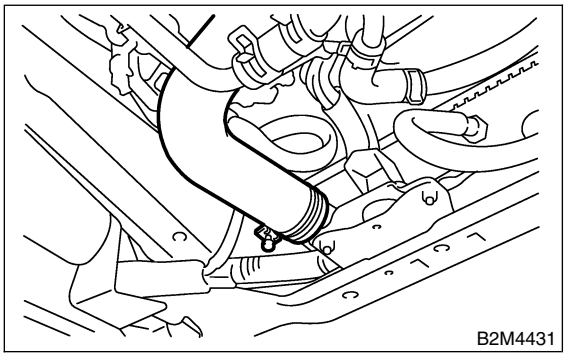

12) Install under cover.

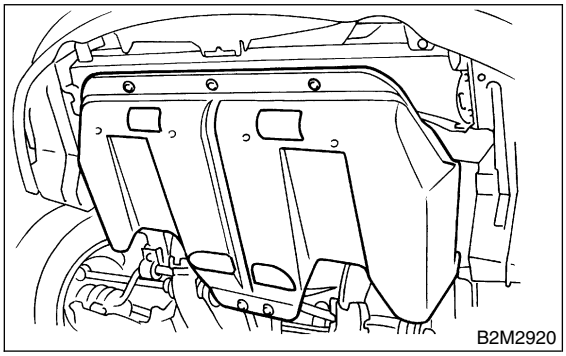

13) Lower the vehicle.
14) Connect battery ground cable.

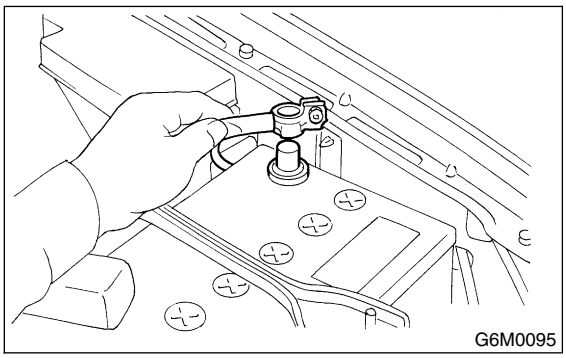

15) Fill coolant. <Ref. to CO(H6)-18 FILLING OF ENGINE COOLANT, REPLACEMENT, Engine Coolant.>

16) Check ATF level. <Ref. to AT-9 REPLACEMENT, Automatic Transmission Fluid.>

C: INSPECTION *S146058A10*

1) Remove radiator cap, top off radiator, and attach tester to radiator in place of cap.

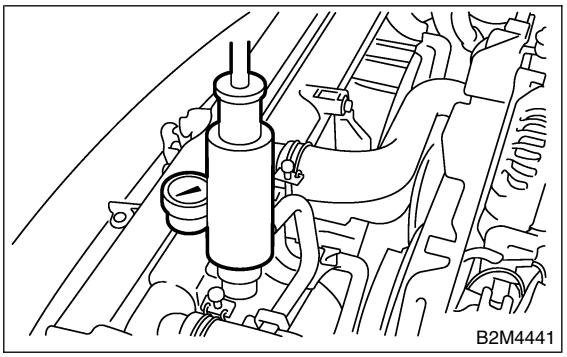

2) Apply a pressure of 157 kPa (1.6 kg/cm^2, 23 psi) to radiator to check if:
   (1) Engine coolant leaks at/around radiator.
   (2) Engine coolant leaks at/around hoses or connections.

CAUTION:
- **Engine should be off.**
- **Wipe engine coolant from check points in advance.**
- **Be careful to prevent engine coolant from spurting out when removing tester.**
- **Be careful also not to deform filler neck of radiator when installing or removing tester.**

8. Radiator Cap S146064

A: INSPECTION S146064A10

1) Attach radiator cap to tester.

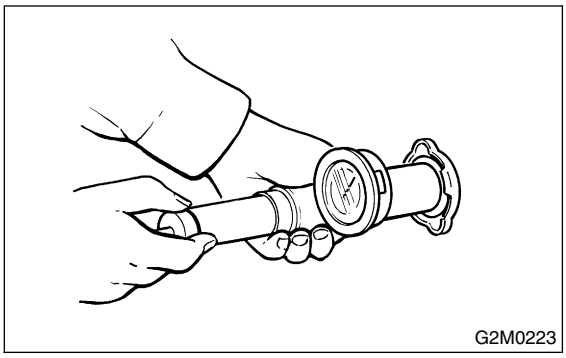

2) Increase pressure until tester gauge pointer stops. Radiator cap is functioning properly if it holds the service limit pressure for five to six seconds.

Standard pressure:
93 — 123 kPa (0.95 — 1.25 kg/cm^2, 14 — 18 psi)

Service limit pressure:
83 kPa (0.85 kg/cm^2, 12 psi)

CAUTION:
Be sure to remove foreign matter and rust from the cap in advance otherwise, results of pressure test will be incorrect.

9. Radiator Main Fan and Fan Motor S146059

A: REMOVAL S146059A18

1) Disconnect battery ground cable.

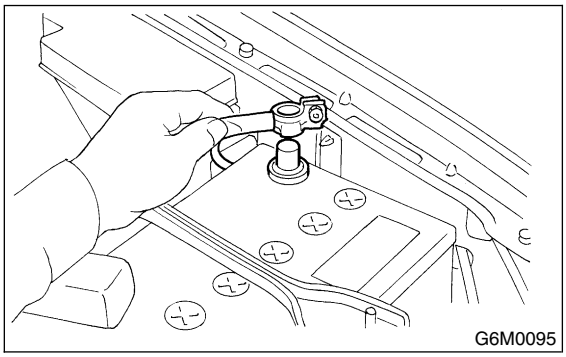

2) Lift-up the vehicle.
3) Remove under cover.

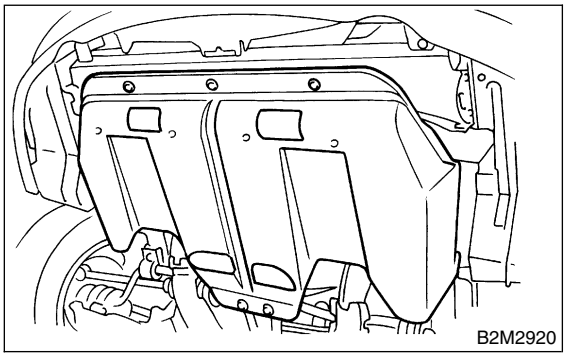

4) Drain engine coolant completely.
<Ref. to CO(H6)-18, Engine Coolant.>
5) Disconnect connectors of main and sub fan motor.

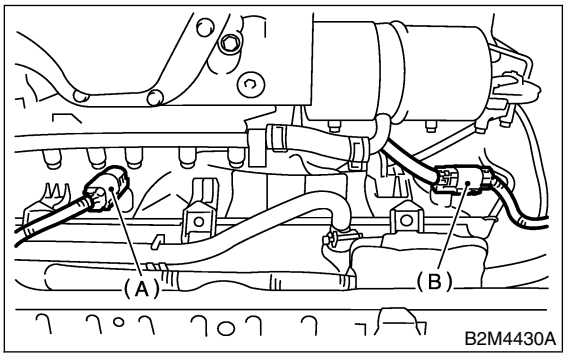

(A) Main fan motor connector
(B) Sub fan motor connector

6) Lower the vehicle.
7) Remove air intake duct.

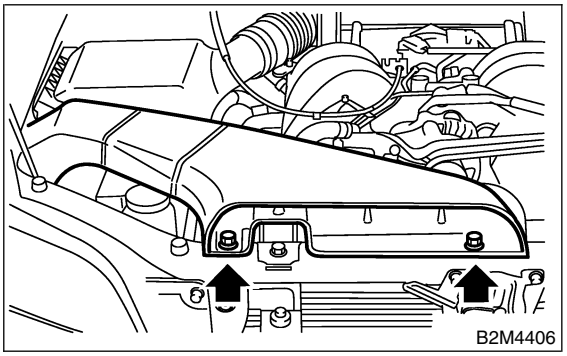

8) Disconnect over flow hose.

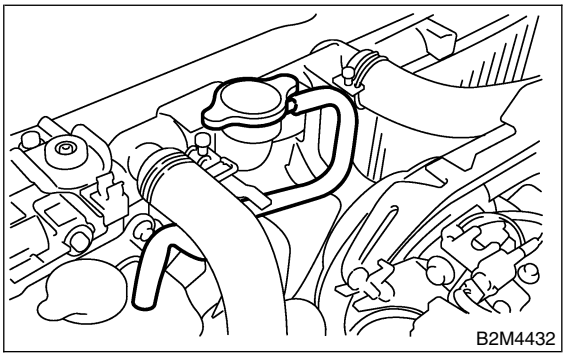

9) Remove reservoir tank.

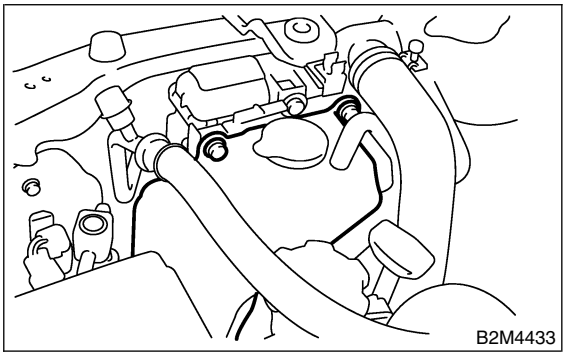

10) Disconnect radiator inlet hoses from radiator.

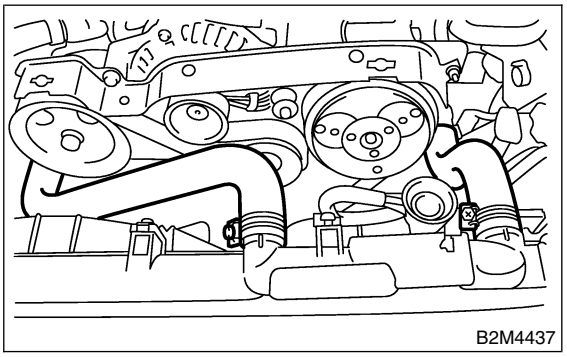

11) Remove radiator sub fan motor assembly.

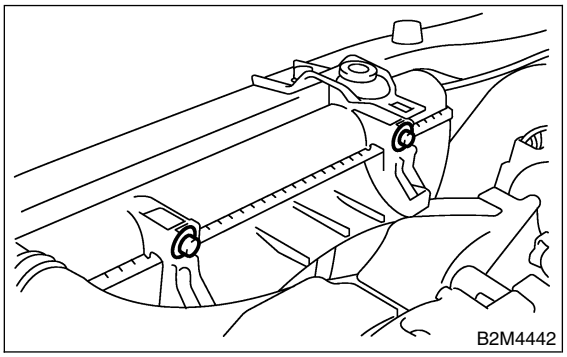

12) Remove radiator main fan motor assembly.

NOTE:
When removing main fan assembly by lifting it upward, main fan shroud will cause interference with coolant suction area. In order to avoid this, shift the main fan assembly over to sub fan side before removing it.

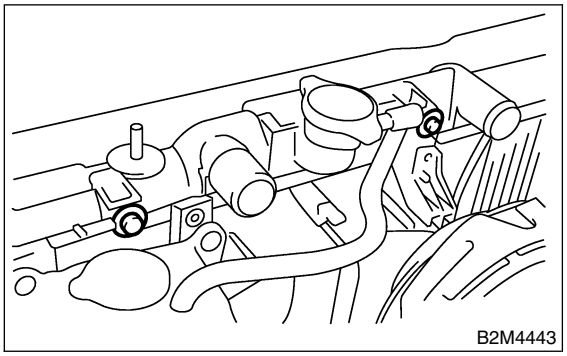

B: INSTALLATION S146059A11

Install in the reverse order of removal.

Tightening torque:
4.9 N·m (0.50 kgf-m, 3.6 ft-lb)

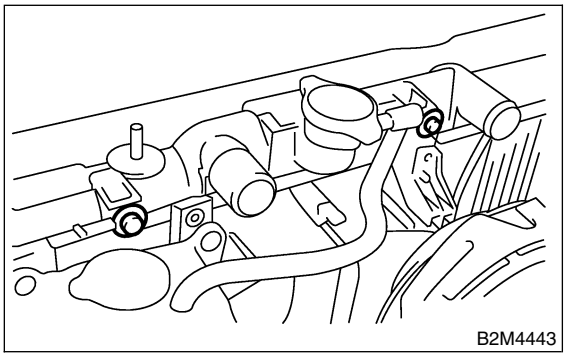

Tightening torque:
4.9 N·m (0.50 kgf-m, 3.6 ft-lb)

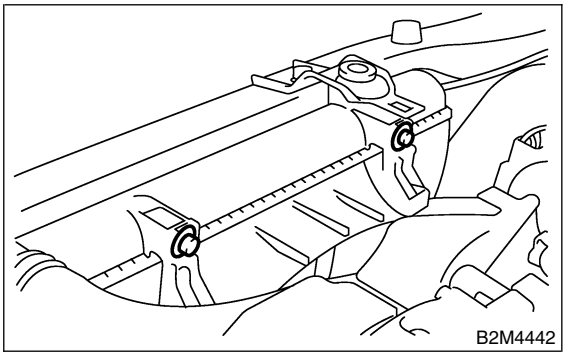

Tightening torque:
4.9 N·m (0.50 kgf-m, 3.6 ft-lb)

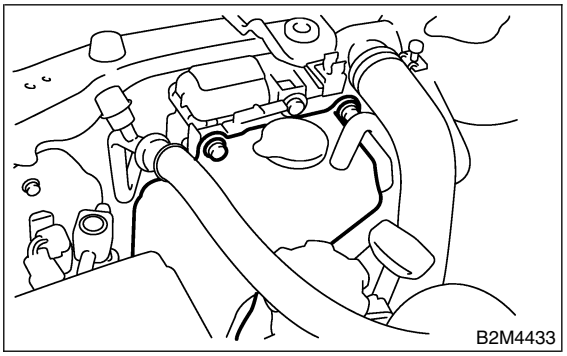

C: DISASSEMBLY S146059A06

1) Remove clip which holds motor connector onto shroud.

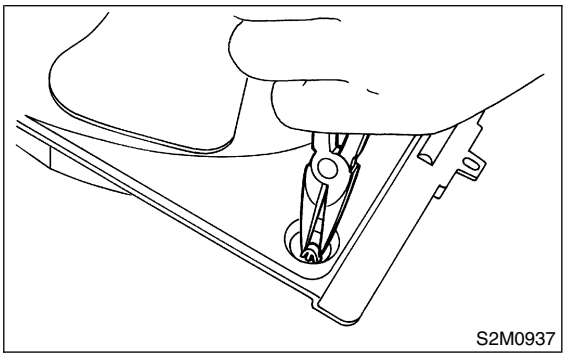

2) Remove nut which holds fan itself onto fan motor and shroud assembly.

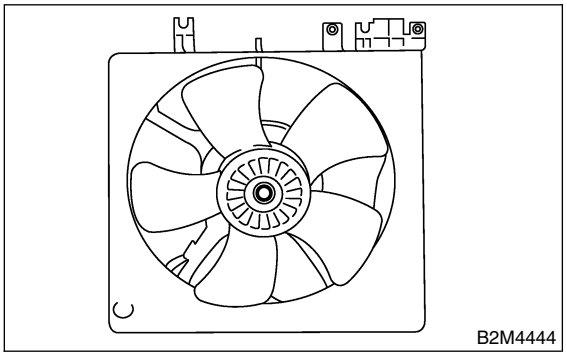

3) Remove screws which install fan motor onto shroud.

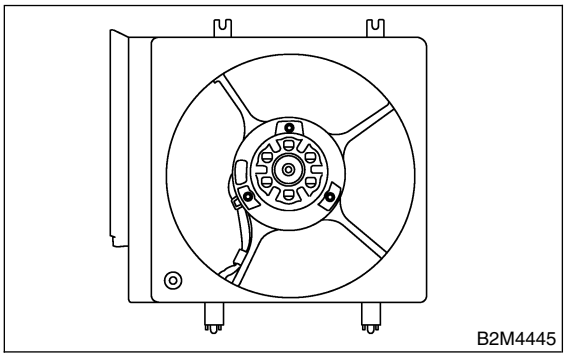

D: ASSEMBLY S146059A02

Assemble in the reverse order of disassembly.

Tightening torque:
4.4 N·m (0.45 kgf-m, 3.3 ft-lb)

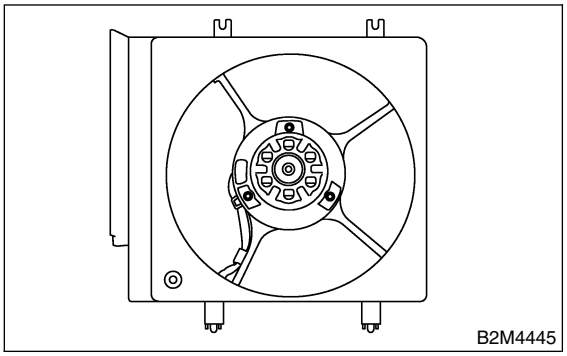

Tightening torque:
7.5 N·m (0.76 kgf-m, 5.5 ft-lb)

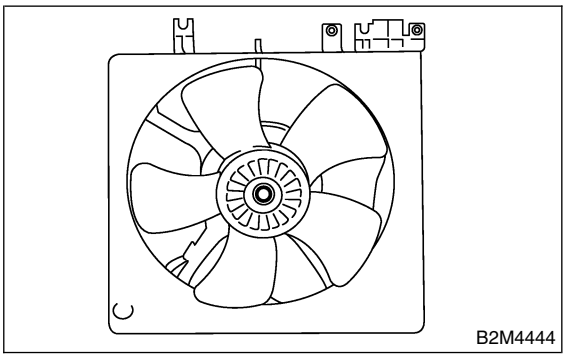

E: INSPECTION S146059A10

1) Connect battery positive (+) terminal to terminal No. 2, and negative (–) terminal to terminal No. 1 of main fan motor connector.
2) Make sure the main fan motor operates properly. Replace it if it doesn't.

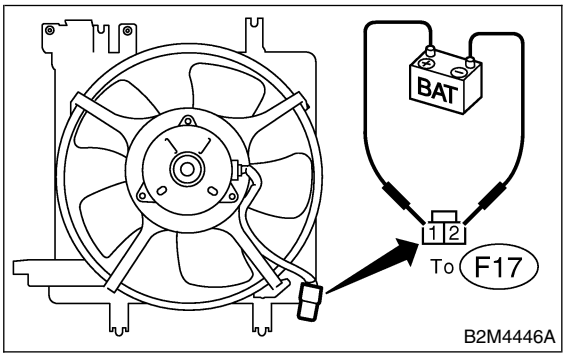

10. Radiator Sub Fan and Fan Motor S146074

A: REMOVAL S146074A18

1) Disconnect battery ground cable.

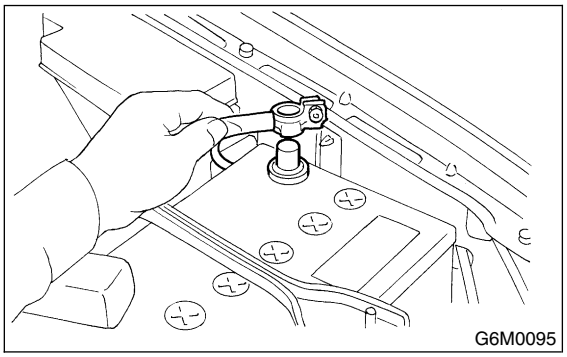

2) Lift-up the vehicle.
3) Remove under cover.

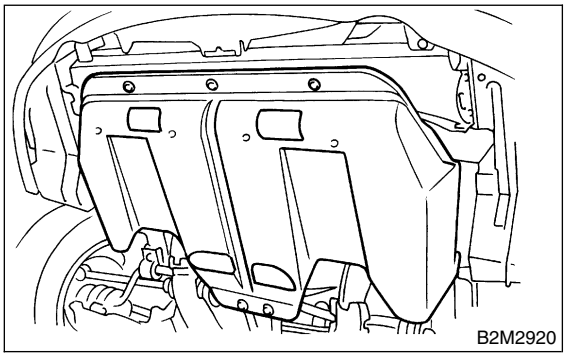

4) Disconnect connector of sub fan motor.

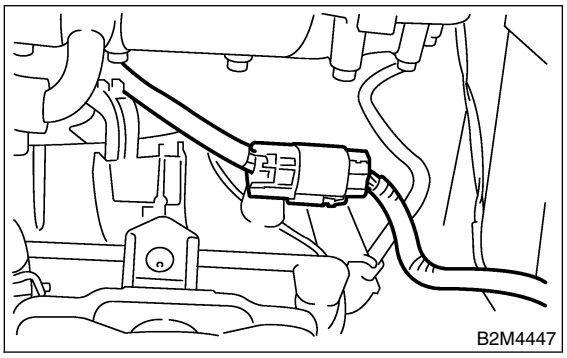

5) Lower the vehicle.
6) Remove air intake duct.

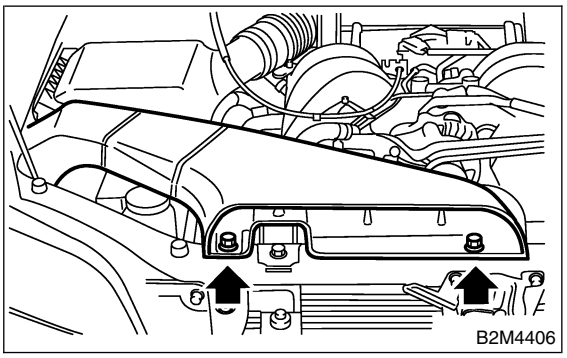

7) Remove bolts which hold sub fan shroud to radiator.
8) Remove radiator sub fan shroud through the under side of vehicle.

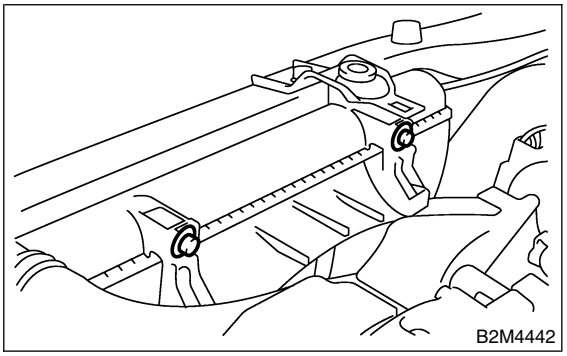

B: INSTALLATION S146074A11

Install in the reverse order of removal.

Tightening torque:
4.9 N·m (0.50 kgf-m, 3.6 ft-lb)

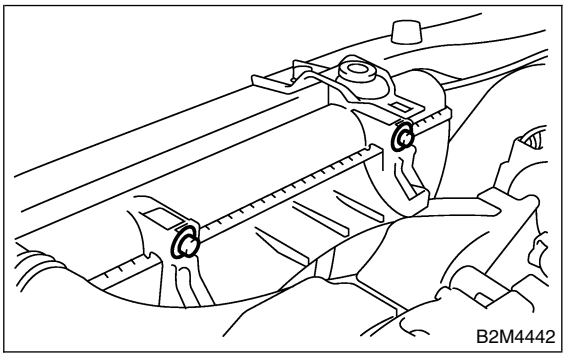

C: DISASSEMBLY S146074A06

1) Remove clip which holds motor harness onto shroud.

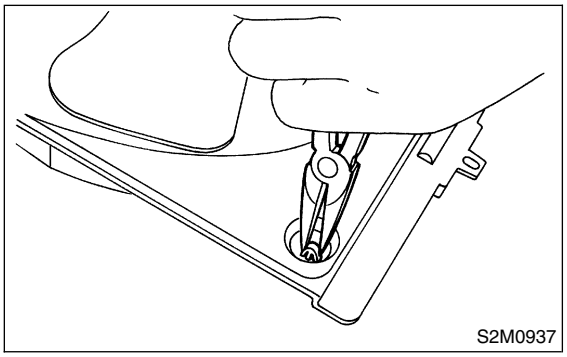

2) Remove nut which holds fan itself onto fan motor and shroud assembly.

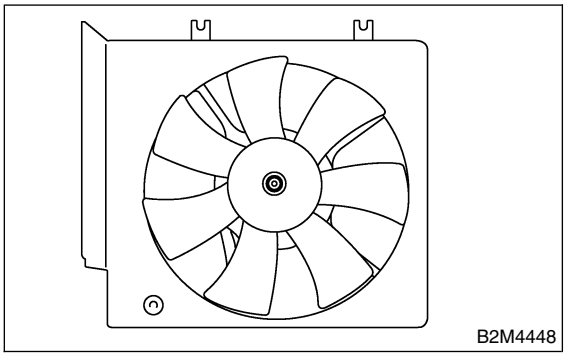

3) Remove screws which install fan motor onto shroud.

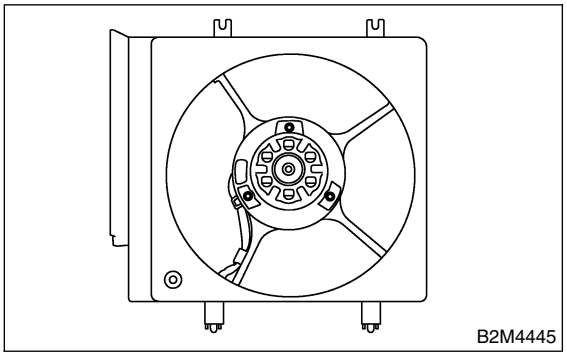

D: ASSEMBLY S146074A02

Assemble in the reverse order of disassembly.

Tightening torque:
4.4 N·m (0.45 kgf-m, 3.3 ft-lb)

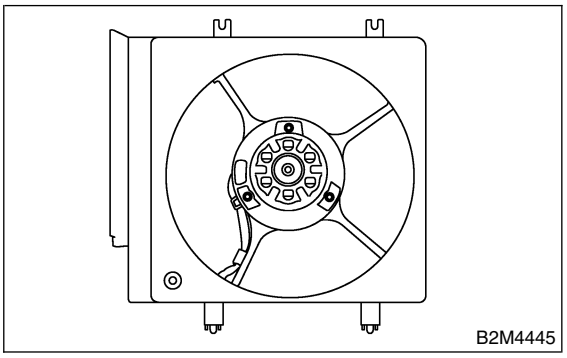

Tightening torque:
7.5 N·m (0.76 kgf-m, 5.5 ft-lb)

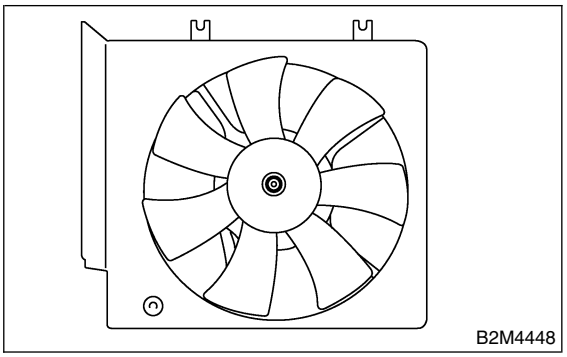

E: INSPECTION S146074A10

1) Connect battery positive (+) terminal to terminal No. 2, and negative (–) terminal to terminal No. 1 of sub fan motor connector.
2) Make sure the sub-fan motor operates properly. Replace it if it doesn't.

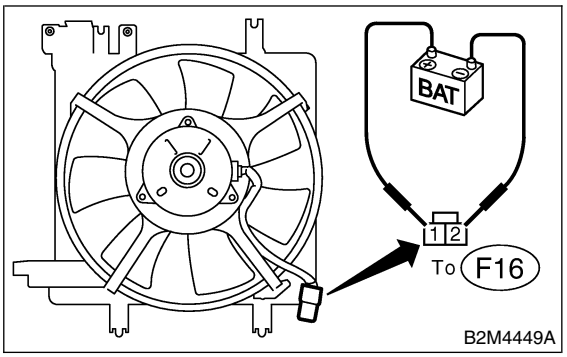

11. Reservoir Tank S146075

A: REMOVAL S146075A18

1) Disconnect over flow hose from radiator filler neck position.
2) Remove bolts which install reservoir tank onto radiator main fan shroud.
3) Remove reservoir tank.

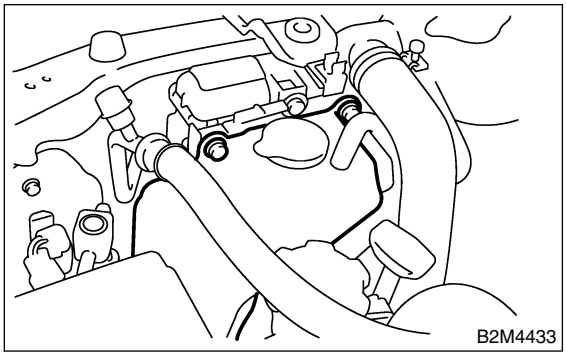

B: INSTALLATION S146075A11

Install in the reverse order of removal.

Tightening torque:
4.9N·m (0.50 kgf-m, 3.6 ft-lb)

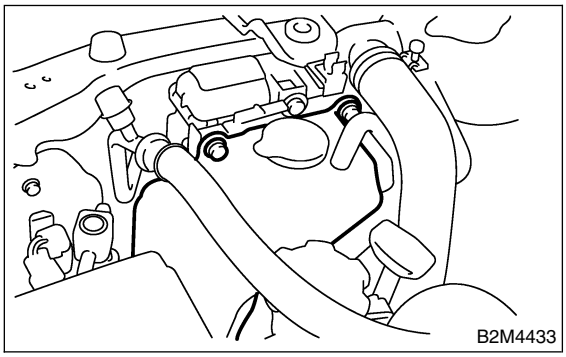

C: INSPECTION S146075A10

Make sure the engine coolant level is between full and low.

12. Engine Cooling System Trouble in General S146078

A: INSPECTION S146078A10

Trouble		Corrective action
Over-heating	a. Insufficient engine coolant	Replenish engine coolant, inspect for leakage, and repair.
	b. Loose timing belt	Repair or replace timing belt tensioner.
	c. Oil on drive belt	Replace.
	d. Malfunction of thermostat	Replace.
	e. Malfunction of water pump	Replace.
	f. Clogged engine coolant passage	Clean.
	g. Improper ignition timing	Inspect and repair ignition control system. <Ref. to EN(H6)-2, Basic Diagnostic Procedure.>
	h. Clogged or leaking radiator	Clean or repair, or replace.
	i. Improper engine oil in engine coolant	Replace engine coolant.
	j. Air/fuel mixture ratio too lean	Inspect and repair fuel injection system. <Ref. to EN(H6)-2, Basic Diagnostic Procedure.>
	k. Excessive back pressure in exhaust system	Clean or replace.
	l. Insufficient clearance between piston and cylinder	Adjust or replace.
	m. Slipping clutch	Repair or replace.
	n. Dragging brake	Adjust.
	o. Improper transmission oil	Replace.
	p. Defective thermostat	Replace.
	q. Malfunction of electric fan	Inspect radiator fan relay, engine coolant temperature sensor or radiator motor and replace there.
Over-cooling	a. Atmospheric temperature extremely low	Partly cover radiator front area.
	b. Defective thermostat	Replace.
Engine coolant leaks.	a. Loosened or damaged connecting units on hoses	Repair or replace.
	b. Leakage from water pump	Replace.
	c. Leakage from water pipe	Repair or replace.
	d. Leakage around cylinder head gasket	Retighten cylinder head bolts or replace gasket.
	e. Damaged or cracked cylinder head and crank-case	Repair or replace.
	f. Damaged or cracked thermostat case	Repair or replace.
	g. Leakage from radiator	Repair or replace.
Noise	a. Defective drive belt	Replace.
	b. Defective radiator fan	Replace.
	c. Defective water pump bearing	Replace water pump.
	d. Defective water pump mechanical seal	Replace water pump.